CUI INC
a bel group



# SERIES: PYBJ3 | DESCRIPTION: DC-DC CONVERTER

## FEATURES

- 3W isolated output
- ultra-wide input voltage range
- single regulated output
- high efficiency up to 82%
- output short circuit, over current, over voltage protection
- 1500 Vdc isolation
- available with or without case
- designed to meet EN/BS EN 62368

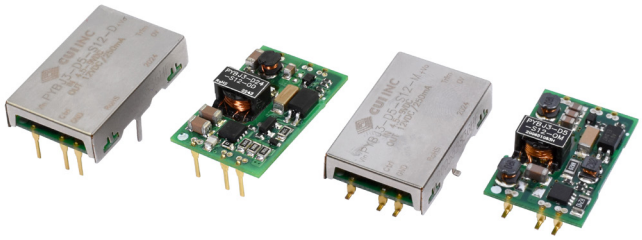

RoHS

## MODEL

| MODEL | input voltage typ (Vdc) | input voltage range (Vdc) | output voltage (Vdc) | output current min (mA) | output current max (mA) | output power max (W) | ripple & noise max (mVp-p) | efficiency[2] typ (%) |
|---|---|---|---|---|---|---|---|---|
| PYBJ3-D5-S5 | 5 | 4.5~9 | 5 | 0 | 600 | 3 | 100 | 72 |
| PYBJ3-D5-S12 | 5 | 4.5~9 | 12 | 0 | 250 | 3 | 100 | 76 |
| PYBJ3-D5-S15 | 5 | 4.5~9 | 15 | 0 | 200 | 3 | 100 | 77 |
| PYBJ3-D5-S24 | 5 | 4.5~9 | 24 | 0 | 125 | 3 | 100 | 76 |
| PYBJ3-D24-S3 | 24 | 9~36 | 3.3 | 0 | 600 | 2 | 100 | 72 |
| PYBJ3-D24-S5 | 24 | 9~36 | 5 | 0 | 600 | 3 | 100 | 77 |
| PYBJ3-D24-S12 | 24 | 9~36 | 12 | 0 | 250 | 3 | 100 | 81 |
| PYBJ3-D24-S15 | 24 | 9~36 | 15 | 0 | 200 | 3 | 100 | 82 |
| PYBJ3-D24-S24 | 24 | 9~36 | 24 | 0 | 125 | 3 | 100 | 81 |

Notes: 1. PYBJ3-Dxx-Sxx-x contains 4 types of products, include DIP package without case, DIP package with case, SMD package without case and SMD package with case.
2. Efficiency is measured In nominal input voltage and rated output load.

## PART NUMBER KEY

**PYBJ3 - DXX - SXX - X X**

- PYBJ3: Base Number
- DXX: Input Voltage
- SXX: Output Voltage
- X: Case: "blank" = with case; O = no case
- X: Mounting Style: D = DIP; M = SMT

## INPUT

| parameter | conditions/description | min | typ | max | units |
|---|---|---|---|---|---|
| operating input voltage[1] | 5 Vdc input models<br>24 Vdc input models | | | 12<br>40 | Vdc<br>Vdc |
| start-up voltage | 5 Vdc input models<br>24 Vdc input models | | | 4.5<br>9 | Vdc<br>Vdc |
| surge voltage | 5 Vdc input models for maximum of 1 second<br>24 Vdc input models for maximum of 1 second | -0.7<br>-0.7 | | 16<br>50 | Vdc<br>Vdc |
| current | 5 Vdc input models, full load<br>24 Vdc input models, full load | | | 857<br>169 | mA |
| filter | 5 Vdc input models - LC filter<br>24 Vdc input models - C filter | | | | |
| CTRL | module on: CTRL pin open or pulled low (0~0.3 Vdc)<br>module off: CTRL pin pulled high (2~12 Vdc)<br>input current when switched off | | 5 | 10 | mA |

Notes: 1. Exceeding maximum input voltage may cause permanent damage.

## OUTPUT

| parameter | conditions/description | min | typ | max | units |
|---|---|---|---|---|---|
| maximum capacitive load | model<br>D5-S5<br>D5-S12<br>D5-S15<br>D5-S24<br>D24-S3<br>D24-S5<br>D24-S12<br>D24-S15<br>D24-S24 | | | <br>470<br>220<br>100<br>47<br>1000<br>1000<br>470<br>330<br>100 | <br>µF<br>µF<br>µF<br>µF<br>µF<br>µF<br>µF<br>µF<br>µF |
| voltage accuracy | 0% ~ 100% load | | | ±2 | % |
| line regulation | input voltage variation from low to high at full load | | | ±0.5 | % |
| load regulation | 5% ~ 100% load | | | ±1 | % |
| switching frequency | PWM mode | | 330 | | kHz |
| transient recovery time | 25% load step change, nominal input voltage | | 300 | 500 | µs |
| transient response deviation | 25% load step change, nominal input voltage<br>3.3 Vdc output<br>5 Vdc output<br>other outputs | | <br>±5<br>±5<br>±3 | <br>±10<br>±8<br>±5 | <br>%<br>%<br>% |
| temperature coefficient | at full load | | | ±0.03 | %/°C |
| trim | | | ±5 | | % |

## PROTECTIONS

| parameter | conditions/description | min | typ | max | units |
|---|---|---|---|---|---|
| over voltage protection | | 110 | | 160 | % |
| over current protection | | 110 | 160 | 250 | % |
| short circuit protection | output shutdown, auto recovery | | | | |

## SAFETY AND COMPLIANCE

| parameter | conditions/description | min | typ | max | units |
|---|---|---|---|---|---|
| isolation voltage | input to output for 1 minute at 5 mA | 500 | | | Vac |
| | input to case for 1 minute at 5 mA | 500 | | | Vac |
| | output to case for 1 minute at 5 mA | 500 | | | Vac |
| | input to output for 1 minute at 1 mA | 1,500 | | | Vdc |
| | input to case for 1 minute at 1 mA | 1,500 | | | Vdc |
| | output to case for 1 minute at 1 mA | 1,500 | | | Vdc |
| isolation resistance | input to output | 100 | | | MΩ |
| | input to case | 100 | | | MΩ |
| | output to case | 100 | | | MΩ |
| isolation capacitance | input to output, 100 kHz / 0.1 V | | 1,000 | | pF |
| safety approvals | designed to meet 62368: EN, BS EN | | | | |
| EMI/EMC | CISPR32/EN55032 class B (see Fig.3-2 for recommended circuit) | | | | |
| ESD | IEC/EN61000-4-2 Contact ±6KV perf. criteria B | | | | |
| radiated immunity | IEC/EN61000-4-3 10V/m perf. criteria A | | | | |
| EFT/burst | IEC/EN61000-4-4 ±2KV (see Fig.3-1 for recommended circuit) perf. criteria B | | | | |
| surge | IEC/EN61000-4-5 line to line ±2KV (see Fig.3-1 for recommended circuit) perf. criteria B | | | | |
| conducted immunity | IEC/EN61000-4-6 3 Vr.m.s perf. criteria A | | | | |
| MTBF | as per MIL-HDBK-217F, 25°C | 1,000 | | | K hours |
| RoHS | yes | | | | |

## ENVIRONMENTAL

| parameter | conditions/description | min | typ | max | units |
|---|---|---|---|---|---|
| operating temperature | see derating curve | -40 | | 85 | °C |
| storage temperature | | -55 | | 125 | °C |
| storage humidity | non-condensing | 5 | | 95 | % |
| vibration | 10-55Hz | | | 5 | G |

## MECHANICAL

| parameter | conditions/description | min | typ | max | units |
|---|---|---|---|---|---|
| dimensions | DIP without case: 24.00 x 15.10 x 6.19 [0.944 x 0.594 x 0.243 inch] | | | | mm |
| | DIP with case: 25.00 x 16.40 x 6.80 [0.984 x 0.645 x 0.267 inch] | | | | mm |
| | SMT without case: 26.20 x 15.10 x 6.19 [1.031 x 0.594 x 0.243 inch] | | | | mm |
| | SMT with case: 26.20 x 16.40 x 6.80 [1.031 x 0.645 x 0.267 inch] | | | | mm |
| case material | aluminum alloy | | | | |
| weight | DIP without case, SMT without case | | 2.2 | | g |
| | DIP with case, SMT with case | | 3.5 | | g |

## MECHANICAL DRAWING (DIP WITHOUT CASE)

units: mm [inch]
tolerance: ±0.50[±0.020]
pin diameter tolerance: ±0.10[±0.004]

| PIN Out | |
|---|---|
| PIN | Function |
| 1 | Vin |
| 2 | Ctrl |
| 3 | GND |
| 4 | 0V |
| 5 | Trim |
| 6 | +Vo |

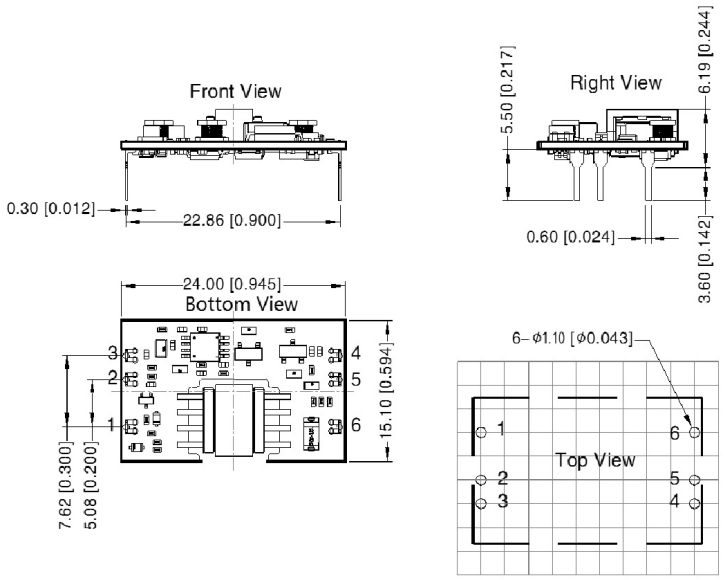


Note: Grid 2.54*2.54mm

## MECHANICAL DRAWING (DIP WITH CASE)

units: mm [inch]
tolerance: ±0.50[±0.020]
pin diameter tolerance: ±0.10[±0.004]

| PIN Out | |
|---|---|
| PIN | Function |
| 1 | Vin |
| 2 | Ctrl |
| 3 | GND |
| 4 | 0V |
| 5 | Trim |
| 6 | +Vo |

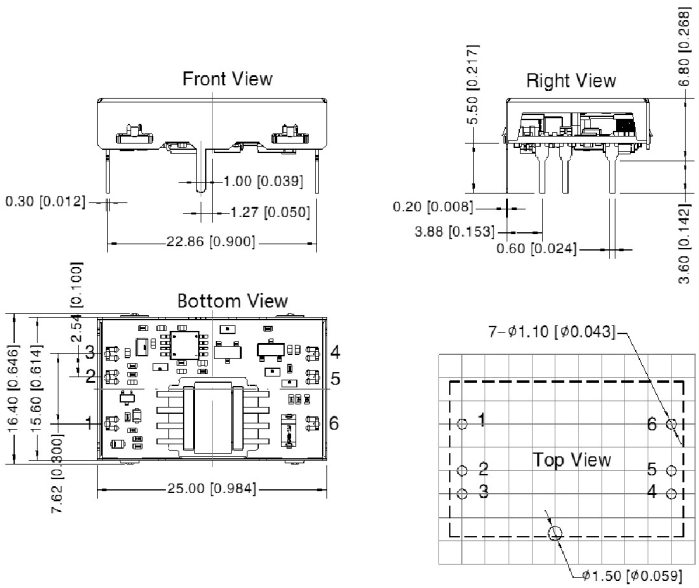


Note: Grid 2.54*2.54mm

## MECHANICAL DRAWING (SMT WITHOUT CASE)

units: mm [inch]
tolerance: ±0.50[±0.020]
pin diameter tolerance: ±0.10[±0.004]

| PIN Out | |
|---|---|
| PIN | Function |
| 1 | Vin |
| 2 | Ctrl |
| 3 | GND |
| 4 | 0V |
| 5 | Trim |
| 6 | +Vo |

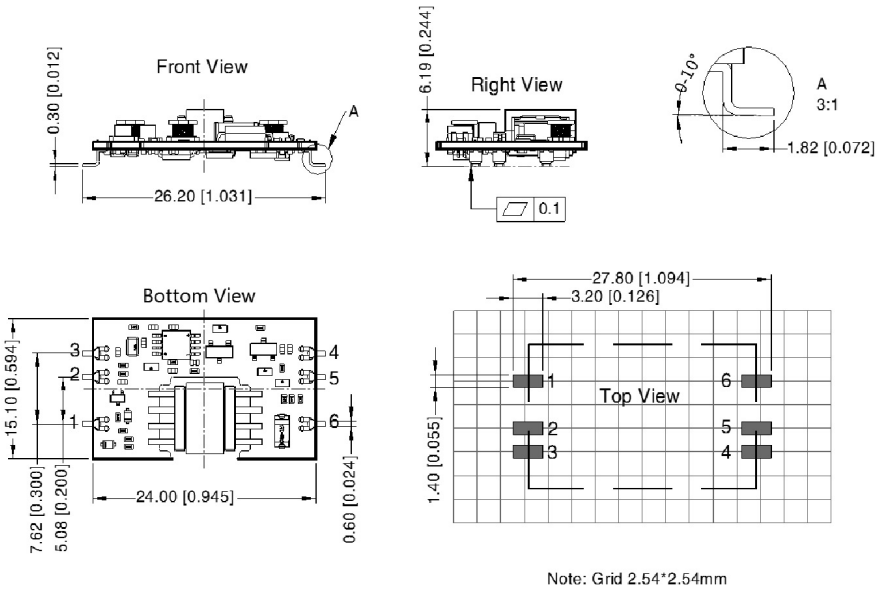


## MECHANICAL DRAWING (SMT WITH CASE)

units: mm [inch]
tolerance: ±0.50[±0.020]
pin diameter tolerance: ±0.10[±0.004]

| PIN Out | |
|---|---|
| PIN | Function |
| 1 | Vin |
| 2 | Ctrl |
| 3 | GND |
| 4 | 0V |
| 5 | Trim |
| 6 | +Vo |

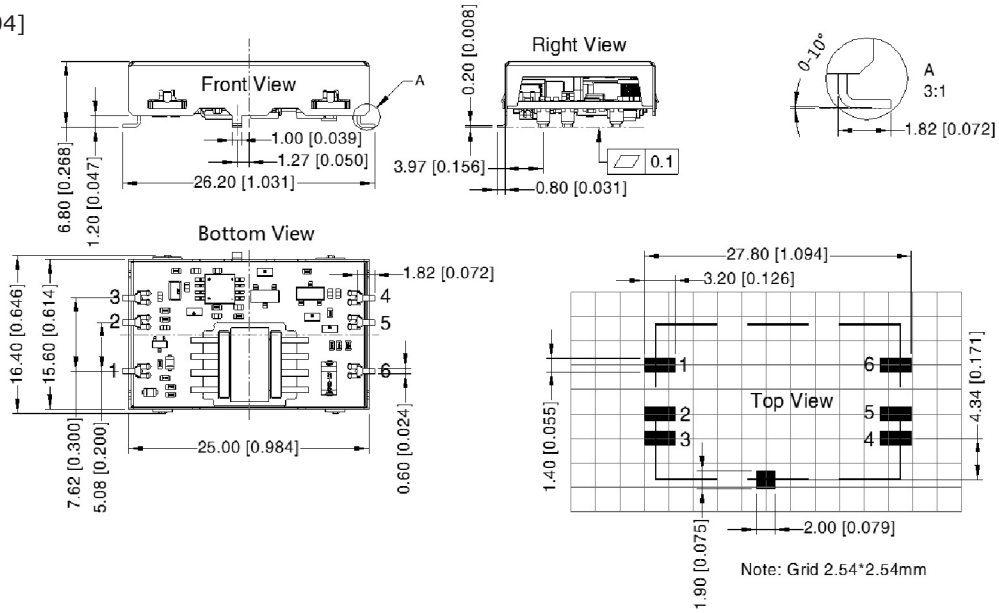

## DERATING CURVES

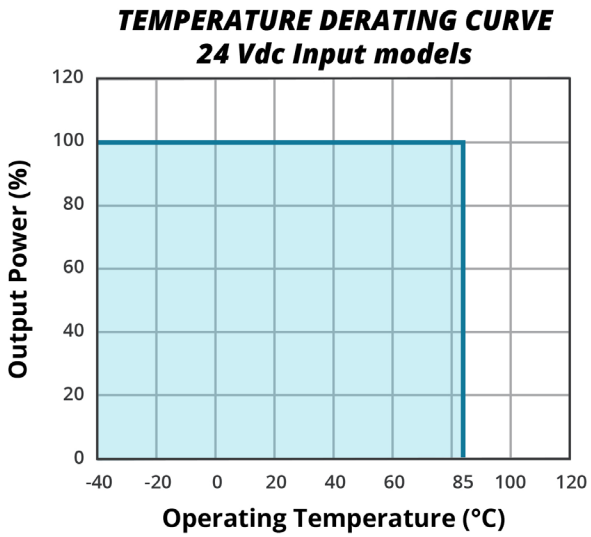


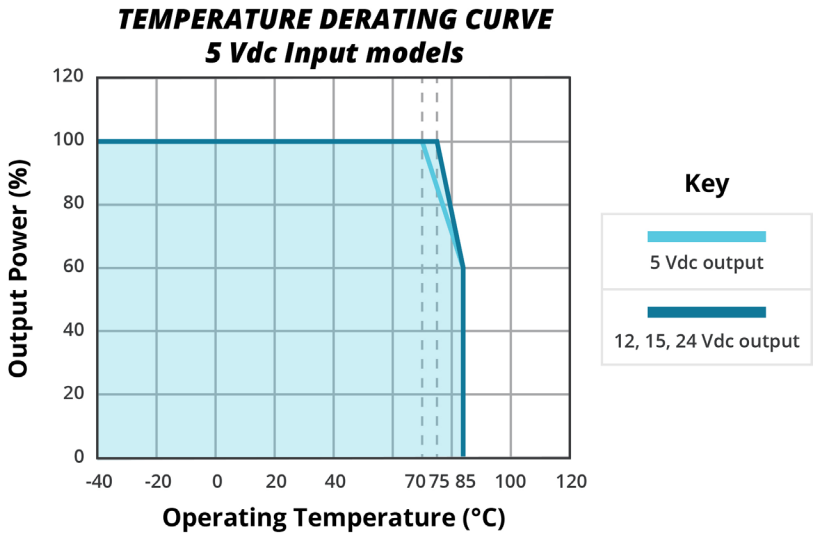


## APPLICATION CIRCUIT

All the DC-DC converters of this series are tested before delivery using the recommended circuit shown in Fig. 2. Input and/or output ripple can be further reduced by appropriately increasing the input & output capacitor values Cin and Cout and/or by selecting capacitors with a low ESR (equivalent series resistance). Also make sure that the capacitance is not exceeding the max. capacitive load value of the product.

**Figure 1**

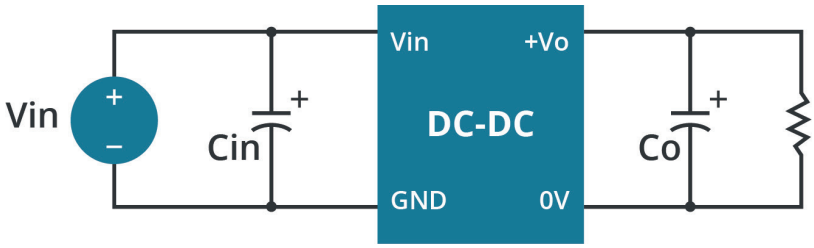


**Table 1**

| Vout (Vdc) | Cin (µF) | Cout (µF) |
|---|---|---|
| 3.3 | 10 | 100 |
| 5 | | |
| 12 | | |
| 15 | | |
| 24 | | |

## EMC RECOMMENDED CIRCUIT

**Figure 2**

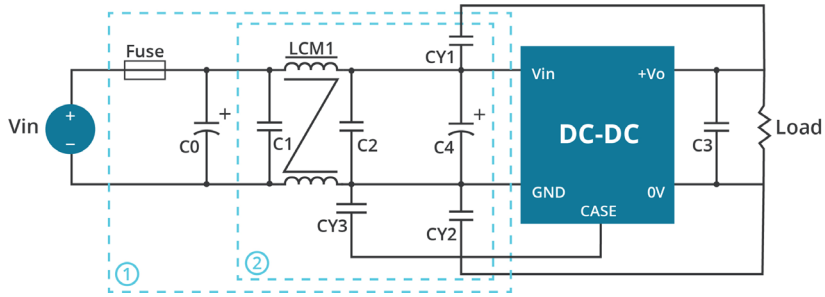


**Table 2**

| Recommended External Circuit Components | | |
|---|---|---|
| Vin (Vdc) | 5 | 24 |
| FUSE | choose according to actual input current | |
| C0 | 2200µF/35V | 1000µF/50V |
| C1 | 4.7µF/50V | |
| C2 | 4.7µF/50V | |
| C4 | 100µF/50V | 220µF/50V |
| C3 | Refer to the Cout in Fig.2 | |
| LCM1 | 2.2mH | |
| CY1/CY2/CY3 | 2.2nF/2kV | |

## APPLICATION NOTES

**Figure 3**

*Trim up*

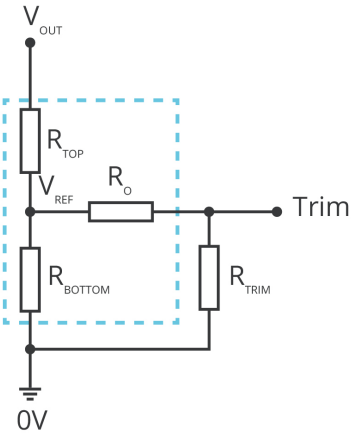


*Trim down*

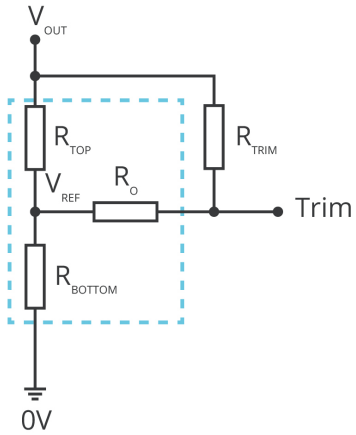


$$R_{TRIM} = \frac{a \cdot R_{BOTTOM}}{R_{BOTTOM} - a} - R_O \qquad a = \frac{V_{REF}}{V_{OUT} - V_{REF}} \cdot R_{TOP}$$

*Formula for Trim up*

$$R_{TRIM} = \frac{a \cdot R_{TOP}}{R_{TOP} - a} - R_O \qquad a = \frac{V_{OUT} - V_{REF}}{V_{REF}} \cdot R_{BOTTOM}$$

*Formula for Trim down*

**Table 3**

| $V_{OUT}$ | $R_{TOP}$ | $R_{BOTTOM}$ | $R_O$ | $V_{REF}$ |
|---|---|---|---|---|
| (Vdc) | (kΩ) | (kΩ) | (kΩ) | (V) |
| 3.3 | 4.80 | 2.87 | 10 | 1.25 |
| 5 | 2.87 | 2.87 | 10 | 2.5 |
| 12 | 10.91 | 2.87 | 15 | 2.5 |
| 15 | 14.35 | 2.87 | 15 | 2.5 |
| 24 | 24.77 | 2.87 | 17.4 | 2.5 |

Note: Value for $R_{TOP}$, $R_{BOTTOM}$, $R_O$, and $V_{REF}$ refer to Table 3 (fixed internal values).
$R_{TRIM}$: Trim resistance
a: User-defined parameter, no actual meanings
$V_{OUT}$: Nominal output voltage

## REVISION HISTORY

| rev. | description | date |
|---|---|---|
| 1.0 | initial release | 07/16/2020 |
| 1.01 | derating curves and circuit figures updated, CTRL pin polarity updated | 08/09/2021 |
| 1.02 | product image & application section updated | 11/08/2022 |
| 1.03 | CE certification removed | 12/05/2022 |
| 1.04 | temperature coefficient updated | 01/10/2023 |

The revision history provided is for informational purposes only and is believed to be accurate.

CUI INC
a bel group

**Headquarters**
20050 SW 112th Ave.
Tualatin, OR 97062
**800.275.4899**

Fax 503.612.2383
**cui**.com
techsupport@cui.com

CUI offers a two (2) year limited warranty. Complete warranty information is listed on our website.

CUI reserves the right to make changes to the product at any time without notice. Information provided by CUI is believed to be accurate and reliable. However, no responsibility is assumed by CUI for its use, nor for any infringements of patents or other rights of third parties which may result from its use.

CUI products are not authorized or warranted for use as critical components in equipment that requires an extremely high level of reliability. A critical component is any component of a life support device or system whose failure to perform can be reasonably expected to cause the failure of the life support device or system, or to affect its safety or effectiveness.