M12 male 0° A-cod. / RJ45 male 0° shielded

TPE 4x2x24AWG SF/UTP CAT5e bu UL/CSA. CM 5m

Ethernet CAT5
Further cable lengths on request.
Ethernet CAT5e
Male straight – male straight
M12 – RJ45, 8-pole
shielded
USA
without cable sleeves
Plastic housings with good resistance against chemicals and oils.
The resistance to aggressive media should be individually tested for your application. Further details on request.

Link to Product

Illustration

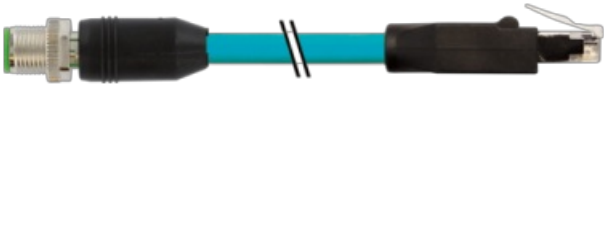

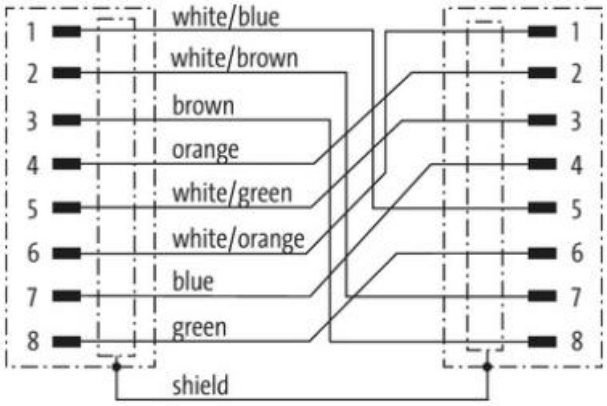

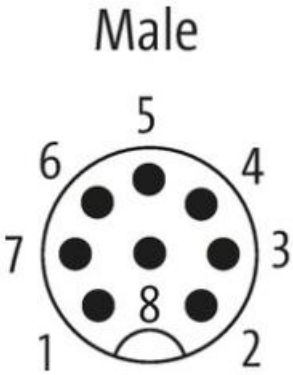

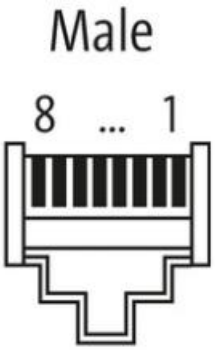

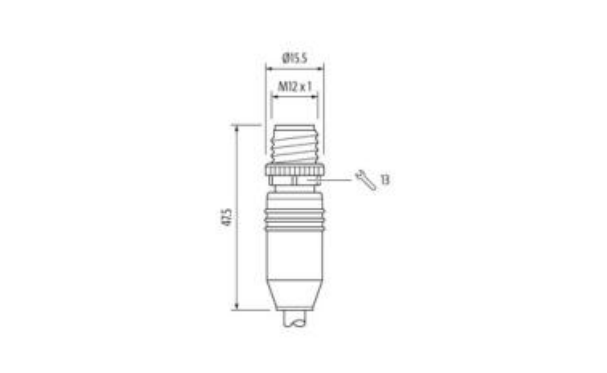

The information in this Product-PDF has been compiled with the utmost care.
Liability for the correctness completeness and topicality of the information is restricted to gross negligence. Version: 2024-07-03

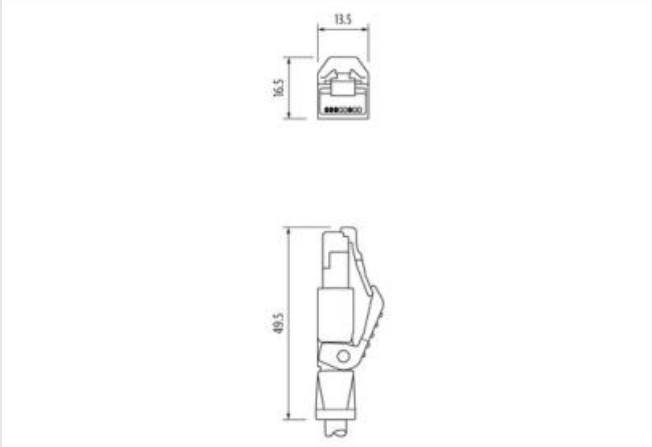

Product may differ from Image

Cable length	5 m
Side 1	
Mounting method	inserted, screwed
Family construction form	M12
No. of poles	8
Side 2	
Mounting method	inserted, screwed
Family construction form	RJ45
No. of poles	8
Commercial data	
ECLASS-6.0	27061801
ECLASS-7.0	27061801
ECLASS-8.0	27061801
ECLASS-9.0	27061801
ECLASS-10.1	27060307
ECLASS-11.1	27060307
ECLASS-12.0	27060307
ETIM-5.0	EC002599
customs tariff number	85444290
GTIN	4048879662383
Packaging unit	1
Electrical data | Supply	
Operating voltage AC	60 V
Operating voltage DC	60 V
Industrial communication	
Transfer parameters	CAT5, Class D (ISO/IEC 11801:2002), (EN 50173-1)
Data transmission rate max.	100 MBit/s
Device protection | Electrical	
Pollution Degree	2
Rated surge voltage	0,8 kV
Material group (IEC 60664-1)	I

The information in this Product-PDF has been compiled with the utmost care.
Liability for the correctness completeness and topicality of the information is restricted to gross negligence. Version: 2024-07-03

MURR ELEKTRONIK
stay connected

Environmental characteristics | Climatic	
Operating temperature min.	-25 °C
Operating temperature max.	85 °C
Additional condition temperature range	depending on cable quality
Important installation notes	
Note on strain relief	Protect the connectors by suitable measures from mechanical loads, e.g. by the usage of cable ties.
Note on bending radius	**Attention:** Observe the permissible bending radii when laying cables, as the IP protection class can be endangered by excessive bending forces.
Installation | Cable	
wire arrangement	(orange-white, orange), (blue-white, blue), (brown-white, brown), (green-white, green)
Cable identification	S4W
Jacket Color	blue
Type of Certificate	cURus
Amount stranding	4
Stranding	2 wires twisted
Amount stranding (type 2)	1
Stranding (type 2)	4 Stranded joints twisted
Banding	Foil
wire arrangement	(orange-white, orange), (blue-white, blue), (brown-white, brown), (green-white, green)
Cable weigth	74,8 g/m
Material jacket	TPE
Freedom from ingredients (jacket)	lead-free, CFC-free
Outer-diameter (jacket)	7,6 mm
Tolerance outer diameter (sheath)	± 5 %
Material wire insulation	HDPE
Amount wires	8
Outer diameter insulation	1,17 mm
Outer diameter tolerance core insulation	± 5 %
Ingredient freeness wire insulation	lead-free, CFC-free
Amount strands (wire)	7
Diameter of single wires	24 AWG
Conductor crosssection (wire)	24 AWG
Material conductor wire	copper stranded wire, tinned
Nominal voltage AC max.	600 V
Current load capacity (standard)	to DIN VDE 0298-4
Current load capacity min. wire	2 A
Electrical resistance line constant wire	76,4 Ω/km @ 20 °C
AC withstand voltage (wire - wire)	3 kV @ 60 s
Electrical capacity line constant (wire - wire)	49000 pF/km
Power frequency withstand voltage (wire - jacket)	3 kV @ 60 s
Min. operating temperature (static)	-40 °C
Max. operating temperature (fixed)	80 °C
Operating temperature min. (dynamic)	-40 °C
Operating temperature max. (dynamic)	80 °C
Flame resistance	UL 1581 § 1100 FT2 | UL 1581 § 1090 | IEC 60332-2-2
chemical resistance	Good, application-related testing
Gasoline resistance	Good, application-related testing
Oil resistance	DIN EN 60811-404 | Good, application-related testing
Bending radius (fixed)	5 x Outer diameter
Bending radius (dynamic)	10 x Outer diameter
No. of bending cycles (C-track)	1 Mio. @ 25 °C
No. of torsion cycles	3 Mio. 25 °C
Torsion stress	± 270 °/m

The information in this Product-PDF has been compiled with the utmost care.
Liability for the correctness completeness and topicality of the information is restricted to gross negligence. Version: 2024-07-03

MURR ELEKTRONIK
stay connected

The information in this Product-PDF has been compiled with the utmost care.
Liability for the correctness completeness and topicality of the information is restricted to gross negligence. Version: 2024-07-03

Murrelektronik Inc. | 1327 Northbrook Parkway, Suite 460 | Suwanee, GA 30024 | Fon +1 770 497-9292 | Fax +1 770 497-9391 | shop@murrinc.com | shop.murrinc.com