M12 male 0° / M12 female 0° A-cod.

TPE 5x18AWG ye UL/CSA. ITC/PLTC 3m

Male straight – female straight
Cable is approved for 600 V
M12 – M12, 5-pole
USA
Cable is approved for 600 V
Plastic housings with good resistance against chemicals and oils.
The resistance to aggressive media should be individually tested for your application. Further details on request.
Further cable lengths on request.

Link to Product

Illustration

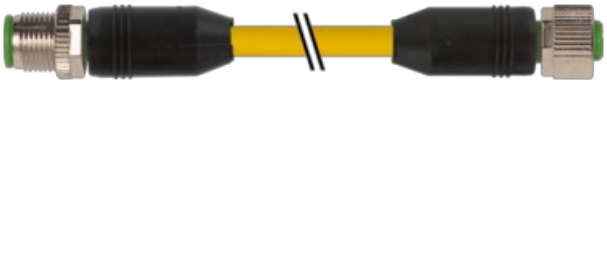

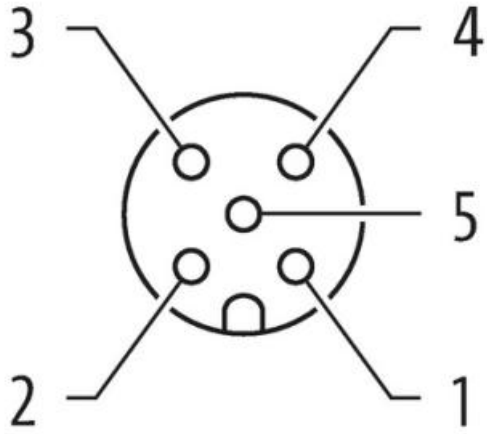

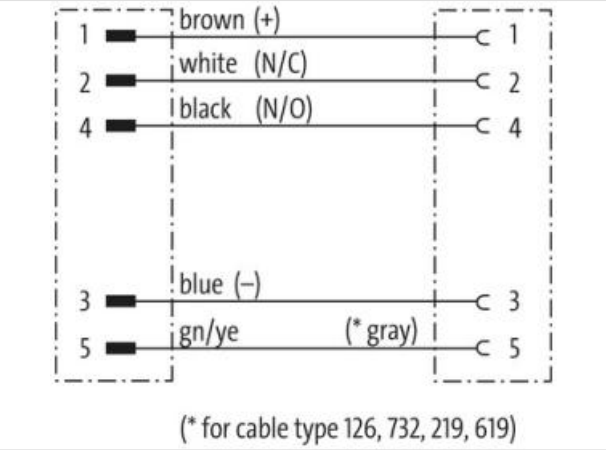

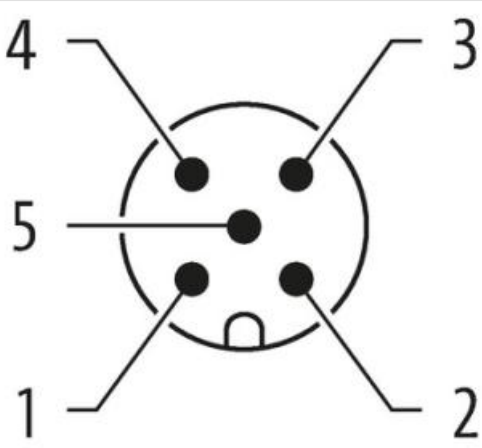

The information in this Product-PDF has been compiled with the utmost care.
Liability for the correctness completeness and topicality of the information is restricted to gross negligence. Version: 2024-07-03

stay connected

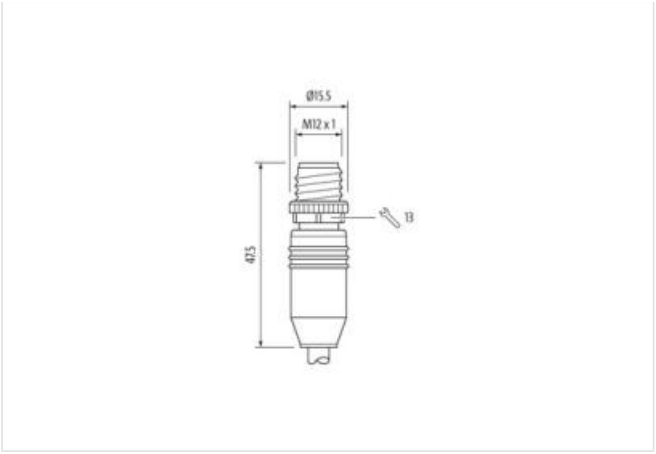

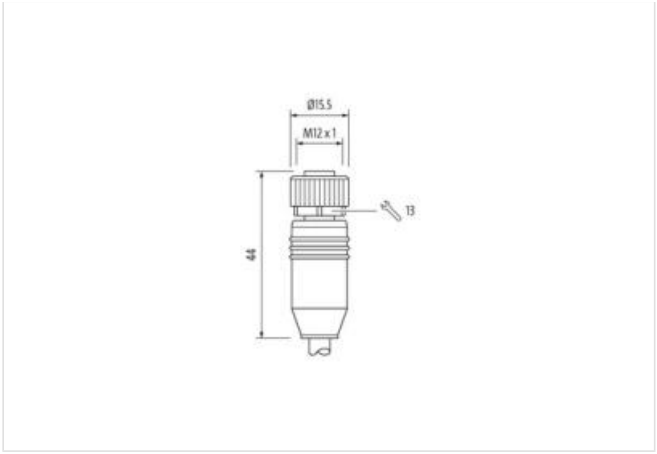

Product may differ from Image

Cable length	3 m
Side 1	
Tightening torque	0,6 Nm
Mounting method	inserted, screwed
Family construction form	M12
Thread	M12 x 1
Coding	A
No. of poles	5
Width across flats	SW13
Degree of protection (EN IEC 60529)	IP65, IP66K, IP67
Side 2	
Tightening torque	0,6 Nm
Mounting method	inserted, screwed
Family construction form	M12
Thread	M12 x 1
Coding	A
No. of poles	5
Width across flats	SW13
Commercial data	
ECLASS-6.0	27279218
ECLASS-7.0	27279218
ECLASS-8.0	27279218
ECLASS-9.0	27060311
ECLASS-10.1	27060311
ECLASS-11.1	27060311
ECLASS-12.0	27060311
ETIM-5.0	EC001855
customs tariff number	85444290
GTIN	4048879531429
Packaging unit	1
Electrical data | Supply	
Operating voltage AC max.	125 V

The information in this Product-PDF has been compiled with the utmost care.
Liability for the correctness completeness and topicality of the information is restricted to gross negligence. Version: 2024-07-03

MURR ELEKTRONIK
stay connected

Operating voltage DC max.	125 V
Operating voltage AC (UL-listed)	30 V
Operating voltage DC (UL-listed)	30 V
Current operating per contact max.	4 A
Device protection | Electrical	
Additional condition protection degree	inserted, screwed
Pollution Degree	3
Rated surge voltage	1,5 kV
Material group (IEC 60664-1)	I
Mechanical data	
Contour for corrugated hose	without
Mechanical data | Material data	
Coating locking	Nickeled
Material housing	PUR
Locking material	Zinc die-casting
Mechanical data | Mounting data	
Mounting method	inserted, screwed, Shaking protection
Environmental characteristics | Climatic	
Operating temperature min.	-25 °C
Operating temperature max.	85 °C
Additional condition temperature range	depending on cable quality
Important installation notes	
Note on strain relief	Protect the connectors by suitable measures from mechanical loads, e.g. by the usage of cable ties.
Note on bending radius	**Attention:** Observe the permissible bending radii when laying cables, as the IP protection class can be endangered by excessive bending forces.
Conformity	
Product standard	DIN EN 61076-2-101 (M12)
Installation | Cable	
wire arrangement	brown, black, blue, white, green-yellow
Cable identification	161
Jacket Color	yellow
Type of Certificate	cURus
Amount stranding	1
Stranding	5 wires around Core filler twisted
Filler	yes
wire arrangement	brown, black, blue, white, green-yellow
Cable weigth	103,4 g/m
Material jacket	TPE
Freedom from ingredients (jacket)	lead-free, CFC-free, halogen-free
Outer-diameter (jacket)	7,75 mm
Tolerance outer diameter (sheath)	± 5 %
Material wire insulation	PVC
Amount wires	5
Outer diameter insulation	1,93 mm
Outer diameter tolerance core insulation	± 5 %
Ingredient freeness wire insulation	lead-free, CFC-free
Amount strands (wire)	19
Diameter of single wires	18 AWG
Conductor crosssection (wire)	18 AWG
Material conductor wire	Stranded copper wire, bare
Nominal voltage AC max.	600 V

The information in this Product-PDF has been compiled with the utmost care.
Liability for the correctness completeness and topicality of the information is restricted to gross negligence. Version: 2024-07-03

Current load capacity (standard)	to DIN VDE 0298-4
Current load capacity min. wire	9 A
Electrical resistance line constant wire	22,5 Ω/km
AC withstand voltage (wire - wire)	4 kV @ 60 s
Power frequency withstand voltage (wire - jacket)	4 kV @ 60 s
Min. operating temperature (static)	-40 °C
Max. operating temperature (fixed)	105 °C
Operating temperature min. (dynamic)	-20 °C
Operating temperature max. (dynamic)	90 °C
Flame resistance	UL 1581 § 1100 FT2 | UL 1581 § 1090 | IEC 60332-2-2
chemical resistance	Good, application-related testing
Gasoline resistance	Good, application-related testing
Oil resistance	DIN EN 60811-404 | Good, application-related testing
Bending radius (fixed)	10 x Outer diameter
Bending radius (dynamic)	15 x Outer diameter
No. of bending cycles (C-track)	10 Mio.
No. of torsion cycles	3 Mio.
Torsion stress	± 180 °/m

The information in this Product-PDF has been compiled with the utmost care.
Liability for the correctness completeness and topicality of the information is restricted to gross negligence. Version: 2024-07-03