MURR ELEKTRONIK
stay connected

M12 female 90° A-cod. with cable

PUR 4x0.34 ye UL/CSA+drag ch. 5m

Female 90°
M12, 4-pole
Art-No. 7005 - M12 Lite - (plastic hexagonal screw) on request
with cable sleeves
Plastic housings with good resistance against chemicals and oils.
The resistance to aggressive media should be individually tested for your application. Further details on request.
Further cable lengths on request.

Link to Product

Illustration

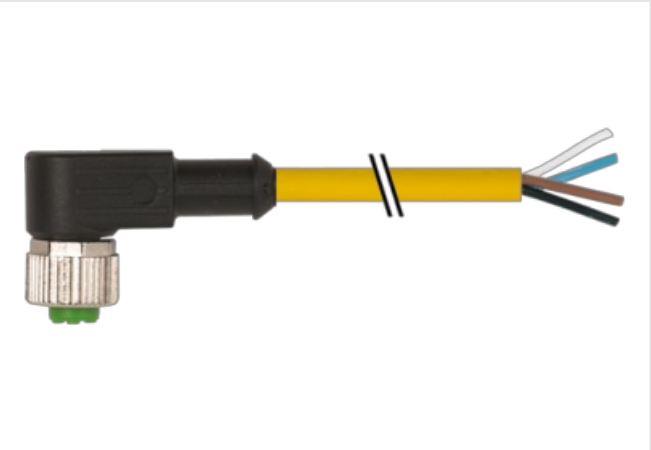

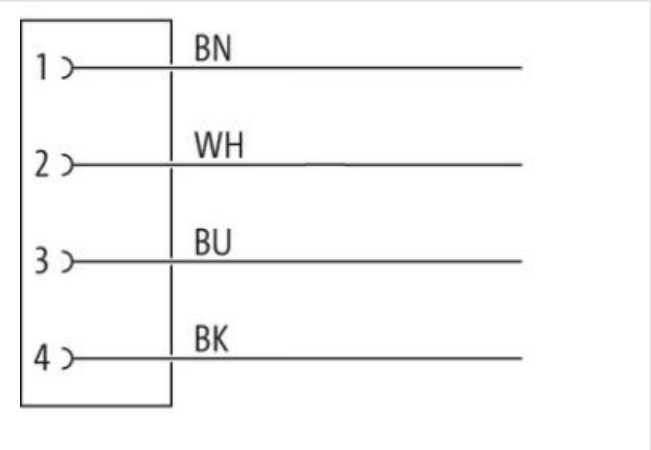

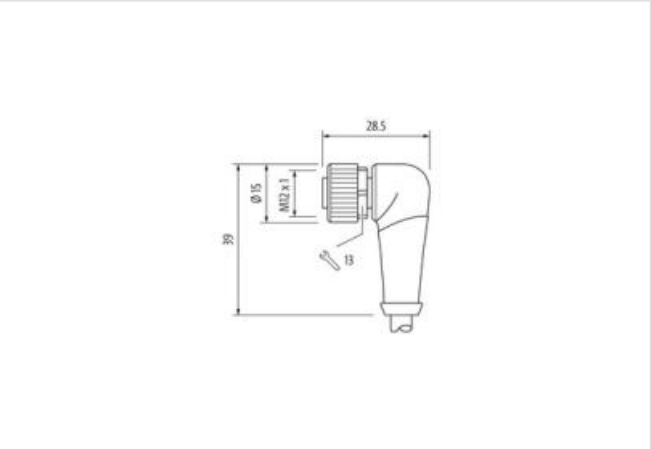

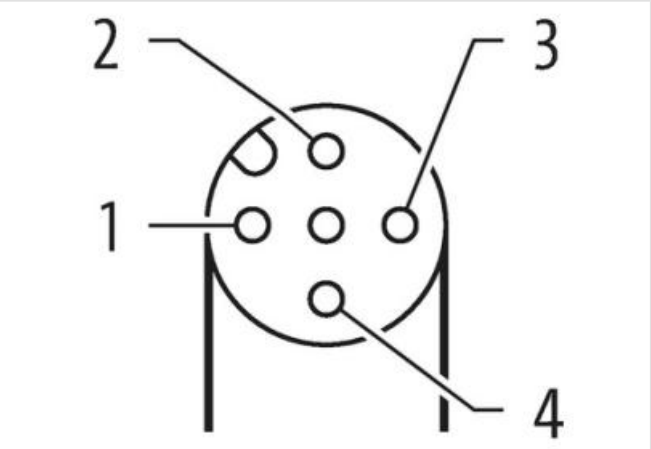

Product may differ from Image

Cable length	5 m

Side 1

Tightening torque	0,6 Nm

The information in this Product-PDF has been compiled with the utmost care.
Liability for the correctness completeness and topicality of the information is restricted to gross negligence. Version: 2024-07-03

Mounting method	inserted, screwed
Coating contact	gold plated
Family construction form	M12
Thread	M12 x 1
suitable for corrugated tube (internal Ø)	10 mm
Coding	A
Material contact	Copper alloy
Material	PUR
Width across flats	SW13
Degree of protection (EN IEC 60529)	IP65, IP66K, IP67
Side 2	
Stripping length (jacket)	20 mm
Coating contact	gold plated
Material contact	Copper alloy
Commercial data	
ECLASS-6.0	27279218
ECLASS-6.1	27279218
ECLASS-7.0	27279218
ECLASS-8.0	27279218
ECLASS-9.0	27060311
ECLASS-10.1	27060311
ECLASS-11.1	27060311
ECLASS-12.0	27060311
ETIM-5.0	EC001855
customs tariff number	85444290
GTIN	4048879207423
Packaging unit	1
Electrical data | Supply	
Operating voltage AC max.	250 V
Operating voltage DC max.	250 V
Operating voltage AC (UL-listed)	30 V
Operating voltage DC (UL-listed)	30 V
Current operating per contact max.	4 A
Installation | Connection	
Stripping length (jacket)	20 mm
Mounting set	M12 x 1
Device protection | Electrical	
Additional condition protection degree	inserted, screwed
Pollution Degree	3
Rated surge voltage	2,5 kV
Material group (IEC 60664-1)	I
Mechanical data | Material data	
Coating locking	Nickeled
Coating of fitting	nickel plated
Material gasket	FKM
Locking material	Zinc die-casting
Material screw connection	Zinc die-casting
Mechanical data | Mounting data	
Mounting method	inserted, screwed, Shaking protection
Environmental characteristics | Climatic	
Operating temperature min.	-25 °C

The information in this Product-PDF has been compiled with the utmost care.
Liability for the correctness completeness and topicality of the information is restricted to gross negligence. Version: 2024-07-03

MURR ELEKTRONIK
stay connected

Operating temperature max.	85 °C
Additional condition temperature range	depending on cable quality
Important installation notes	
Note on strain relief	Protect the connectors by suitable measures from mechanical loads, e.g. by the usage of cable ties.
Note on bending radius	**Attention:** Observe the permissible bending radii when laying cables, as the IP protection class can be endangered by excessive bending forces.
Conformity	
Product standard	DIN EN 61076-2-101 (M12)
Installation | Cable	
wire arrangement	brown, black, blue, white
Cable identification	034
Cable Type	3
Jacket Color	yellow
Type of Certificate	cURus
Amount stranding	1
Stranding	4 wires twisted
wire arrangement	brown, black, blue, white
Cable weigth	36,3 g/m
Material jacket	PUR
Shore hardness jacket	90 ± 5 Shore A
Freedom from ingredients (jacket)	lead-free, cadmium-free, CFC-free, halogen-free, silicone-free
Outer-diameter (jacket)	4,5 mm
Tolerance outer diameter (sheath)	± 5 %
Material wire insulation	PP
Amount wires	4
Outer diameter insulation	1,25 mm
Outer diameter tolerance core insulation	± 5 %
Shore hardness wire insulation	70 ± 5 Shore D
Ingredient freeness wire insulation	lead-free, cadmium-free, CFC-free, halogen-free, silicone-free
Amount strands (wire)	42
Diameter of single wires	0,1 mm
Conductor crosssection (wire)	0,34 mm²
Material conductor wire	Stranded copper wire, bare
Conductor type (wire)	strand class 6
Nominal voltage AC max.	300 V
Current load capacity (standard)	to DIN VDE 0298-4
Current load capacity min. wire	4,8 A
Electrical resistance line constant wire	57 Ω/km @ 20 °C
AC withstand voltage (wire - wire)	2,5 kV @ 60 s
Power frequency withstand voltage (wire - jacket)	2,5 kV @ 60 s
Min. operating temperature (static)	-40 °C
Max. operating temperature (fixed)	80 °C / 90 °C @ 10000 h Operation
Operating temperature min. (dynamic)	-25 °C
Operating temperature max. (dynamic)	80 °C / 90 °C @ 10000 h Operation
Flame resistance	IEC 60332-2-2 | UL 1581 § 1090 | UL 1581 § 1100 FT2
chemical resistance	Good, application-related testing
Gasoline resistance	Good, application-related testing
Oil resistance	Good, application-related testing | DIN EN 60811-404
Bending radius (fixed)	5 x Outer diameter
Bending radius (dynamic)	10 x Outer diameter
No. of bending cycles (C-track)	10 Mio. @ 25 °C
Traversing distance (C-track)	10 m @ 25 °C | horizontal
Travel speed (C-track)	3 m/s @ 25 °C

The information in this Product-PDF has been compiled with the utmost care.
Liability for the correctness completeness and topicality of the information is restricted to gross negligence. Version: 2024-07-03

No. of torsion cycles	2 Mio.
Torsion stress	± 180 °/m
Torsion speed	35 cycles/min

The information in this Product-PDF has been compiled with the utmost care.
Liability for the correctness completeness and topicality of the information is restricted to gross negligence. Version: 2024-07-03