MURR ELEKTRONIK
stay connected

M12 female 90° A-cod. with cable

TPE 4x18AWG ye UL/CSA. ITC/PLTC 3m

Female 90°
Cable is approved for 600 V
M12, 4-pole
USA
Cable is approved for 600 V
Plastic housings with good resistance against chemicals and oils.
The resistance to aggressive media should be individually tested for your application. Further details on request.
Further cable lengths on request.

Link to Product

Illustration

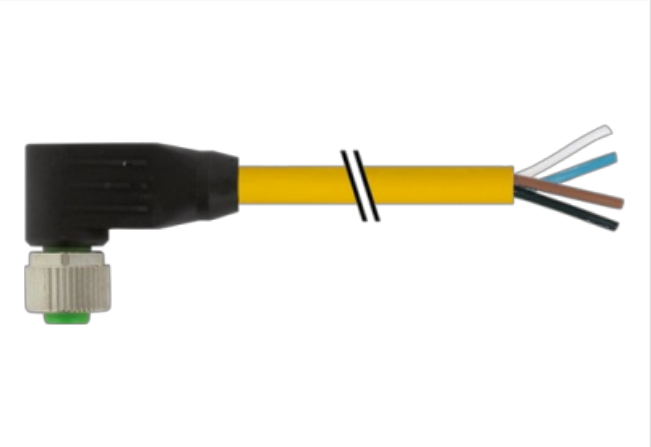

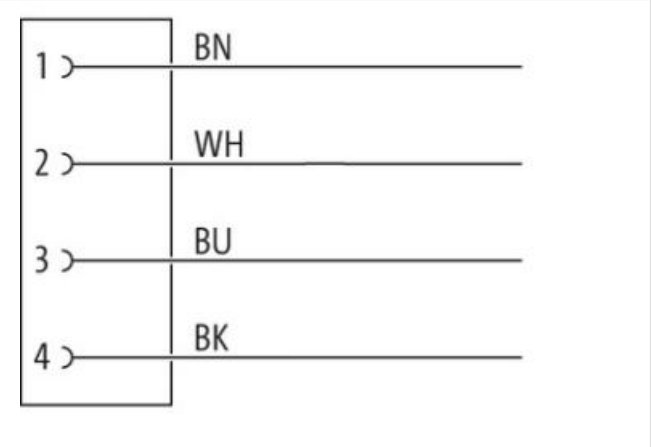

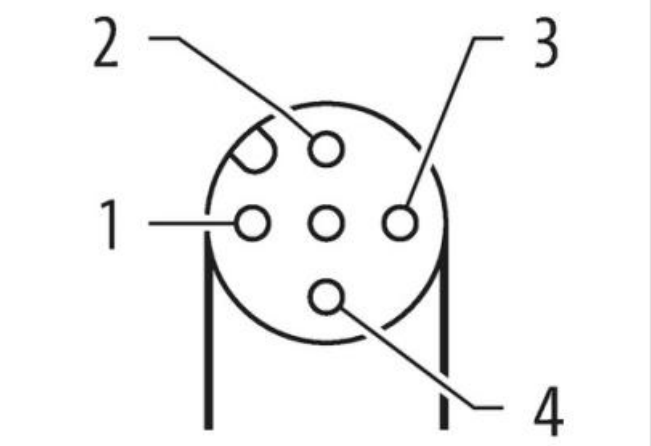

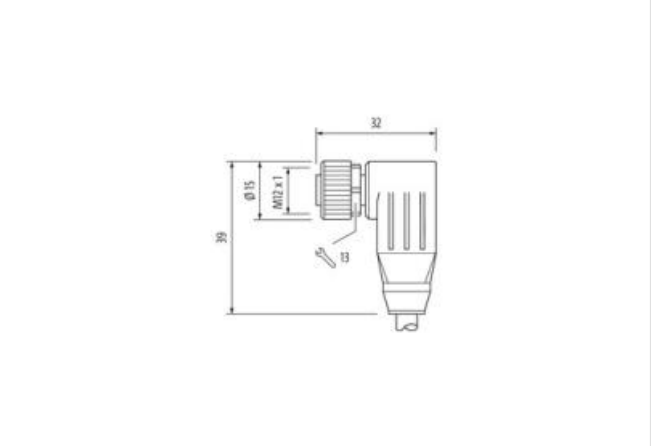

Product may differ from Image

Cable length	3 m

Side 1

The information in this Product-PDF has been compiled with the utmost care.
Liability for the correctness completeness and topicality of the information is restricted to gross negligence. Version: 2024-07-03

MURR ELEKTRONIK
stay connected

Tightening torque	0,6 Nm
Mounting method	inserted, screwed
Family construction form	M12
Thread	M12 x 1
Cable outlet	angled
Coding	A
No. of poles	4
Width across flats	SW13
Degree of protection (EN IEC 60529)	IP65, IP66K, IP67
Side 2	
Stripping length (jacket)	20 mm
Commercial data	
ECLASS-6.0	27279218
ECLASS-7.0	27279218
ECLASS-8.0	27279218
ECLASS-9.0	27060311
ECLASS-10.1	27060311
ECLASS-11.1	27060311
ECLASS-12.0	27060311
ETIM-5.0	EC001855
customs tariff number	85444290
GTIN	4048879518901
Packaging unit	1
Electrical data | Supply	
Operating voltage AC max.	250 V
Operating voltage DC max.	250 V
Operating voltage AC (UL-listed)	30 V
Operating voltage DC (UL-listed)	30 V
Current operating per contact max.	4 A
Installation | Connection	
Stripping length (jacket)	20 mm
Device protection | Electrical	
Additional condition protection degree	inserted, screwed
Pollution Degree	3
Rated surge voltage	2,5 kV
Material group (IEC 60664-1)	I
Mechanical data	
Contour for corrugated hose	without
Mechanical data | Material data	
Coating locking	Nickeled
Locking material	Zinc die-casting
Mechanical data | Mounting data	
Mounting method	inserted, screwed, Shaking protection
Environmental characteristics | Climatic	
Operating temperature min.	-25 °C
Operating temperature max.	85 °C
Additional condition temperature range	depending on cable quality
Important installation notes	
Note on strain relief	Protect the connectors by suitable measures from mechanical loads, e.g. by the usage of cable ties.

The information in this Product-PDF has been compiled with the utmost care.
Liability for the correctness completeness and topicality of the information is restricted to gross negligence. Version: 2024-07-03

Note on bending radius	**Attention:** Observe the permissible bending radii when laying cables, as the IP protection class can be endangered by excessive bending forces.
Conformity	
Product standard	DIN EN 61076-2-101 (M12)
Installation | Cable	
wire arrangement	brown, black, blue, white
Cable identification	150
Jacket Color	yellow
Amount stranding	1
Stranding	4 wires twisted
wire arrangement	brown, black, blue, white
Cable weigth	92,4 g/m
Material jacket	TPE
Freedom from ingredients (jacket)	lead-free, CFC-free, halogen-free
Outer-diameter (jacket)	7,21 mm
Tolerance outer diameter (sheath)	± 5 %
Material wire insulation	PVC
Amount wires	4
Outer diameter insulation	1,93 mm
Outer diameter tolerance core insulation	± 5 %
Ingredient freeness wire insulation	lead-free, CFC-free
Amount strands (wire)	19
Diameter of single wires	18 AWG
Conductor crosssection (wire)	18 AWG
Material conductor wire	Stranded copper wire, bare
Nominal voltage AC max.	600 V
Current load capacity (standard)	to DIN VDE 0298-4
Current load capacity min. wire	9,6 A
Electrical resistance line constant wire	22,5 Ω/km @ 20 °C
AC withstand voltage (wire - wire)	4 kV @ 60 s
Power frequency withstand voltage (wire - jacket)	4 kV @ 60 s
Min. operating temperature (static)	-40 °C
Max. operating temperature (fixed)	105 °C
Operating temperature min. (dynamic)	-20 °C
Operating temperature max. (dynamic)	90 °C
Flame resistance	IEC 60332-2-2 | UL 1581 § 1090 | UL 1581 § 1100 FT2
chemical resistance	Good, application-related testing
Gasoline resistance	Good, application-related testing
Oil resistance	Good, application-related testing | DIN EN 60811-404
Bending radius (fixed)	10 x Outer diameter
Bending radius (dynamic)	15 x Outer diameter
No. of bending cycles (C-track)	10 Mio.
No. of torsion cycles	3 Mio.
Torsion stress	± 180 °/m

The information in this Product-PDF has been compiled with the utmost care.
Liability for the correctness completeness and topicality of the information is restricted to gross negligence. Version: 2024-07-03