Product data sheet



PBS2-RB1X0SG1SSDQ5A0Z

PBS plus

PRESSURE SENSORS

SICK
Sensor Intelligence.



Illustration may differ

Ordering information

Type	Part no.
PBS2-RB1X0SG1SSDQ5A0Z	6073057

Other models and accessories ➜ www.sick.com/PBS_plus

Detailed technical data

Features

Medium	Liquid, gaseous
Pressure type	Gauge pressure
Pressure unit	bar
Measuring range	0 bar ... 1 bar 0 psi ... 15 psi
Process temperature	–20 °C ... +85 °C
Maximum ohmic load R_A	4 mA ... 20 mA (R_A ≤ 0.5 kOhm) 0 V ... 10 V, 3-wire (R_A > 10 kOhm)
Zero point adjustment	Max. + 3 % of span
Output signal	IO-Link/PNP/NPN + PNP/NPN + 4 mA ... 20 mA / 0 V ... 10 V
Rotatable housing	Display against housing with electrical connection: 330 ° Housing against process connection: 320 °
Display	14-Segment LED, red, 4-digit, character height 9 mm, can be rotated electronically by 180° Update: 1,000, 500, 200, 100 ms (adjustable)

Mechanics/electronics

Process connection	G ¼ A according to DIN 3852-E
Wetted parts	Pressure connection: stainless steel 316L Pressure sensor: stainless steel 316L (for measurement ranges from 0 bar ... 10 bar rel stainless steel 13-8 PH)
Internal transmission fluid	Silicone oil (only with pressure ranges < 0 bar ... 10 bar and ≤ 0 bar abs ... 25 bar abs)
Pressure port	3.5 mm Standard
Housing material	Lower body: stainless steel 304, Plastic head: PC + ABS, Buttons: TPE-E, Display window: PC

[1] Enclosure rating IP per IEC 60529. The enclosure rating classes specified only apply when connected with female connectors that provide the corresponding enclosure rating.

Connection type	Round connector M12 x 1, 5-pin
Supply voltage	15 V DC ... 35 V DC
Power consumption	45 mA (for configurations without analog output signal) 70 mA (for configurations with analog output signal)
Total current consumption	Max. 600 mA (including switching current)
Electrical safety	Protection class: III Overvoltage protection: 40 V DC Short-circuit protection: Q_A, Q_1, Q_2 towards M Reverse polarity protection: L^+ to M
Isolation voltage	500 V DC
CE-conformity	EMC Directive: 2014/30 / EU (EN 61326-1:2013; EN 61326-2-3:2013), Pressure equipment directive: 2014/68 / EU, Hazardous materials (RoHS): 2011/65 / EU (EN 50581:2012)
Weight sensor	Approx. 220 g
Seal	NBR seal installed, FPM/FKM seal included
Enclosure rating	IP67 [1)] IP67 [1)]
Protection class III	✓
MTTF	104 years

[1)] Enclosure rating IP per IEC 60529. The enclosure rating classes specified only apply when connected with female connectors that provide the corresponding enclosure rating.

Performance

Non-linearity	≤ ± 0.25 %, of span (Best Fit Straight Line, BFSL) according to IEC 61298-2
Accuracy	≤ ± 0.5 % of the span
Setting accuracy of switching outputs	≤ ± 0.5 % of span
Response time	≤ 5 ms
Long-term drift/one-year stability	≤ ± 0.1 % of the span according to IEC 61298-2 ≤ 0.2 % of the span According to IEC 61298-2 for measuring range ≤ 0.6 bar or flush-mounted membrane (0 psi ... 10 psi)
Temperature coefficient in rated temperature range	Average TC of the zero point: ≤± 0.16% of the span / 10 K Average TC of the span ≤± 0.16% of the span / 10 K
Rated temperature range	0 °C ... +80 °C
Service life	Minimum 100 Mio. load cycles

Ambient data

Ambient temperature	–20 °C ... +80 °C
Storage temperature	–20 °C ... +70 °C
Relative humidity	≤ 75 %
Shock load	50 g, 6 ms according to IEC 60068-2-27 (mechanical shock)
Vibration load	20 g, 10 Hz ... 2,000 Hz (IEC 60068-2-6, at resonance)

Classifications

ECLASS 5.0	27200620
ECLASS 5.1.4	27200620
ECLASS 6.0	27200620
ECLASS 6.2	27200620
ECLASS 7.0	27200620

ECLASS 8.0	27200620
ECLASS 8.1	27200620
ECLASS 9.0	27200620
ECLASS 10.0	27200620
ECLASS 11.0	27200620
ECLASS 12.0	27200620
ETIM 5.0	EC000243
ETIM 6.0	EC000243
ETIM 7.0	EC000243
ETIM 8.0	EC000243
UNSPSC 16.0901	41112409

Dimensional drawing (Dimensions in mm (inch))

G ¼ A DIN 3852-E

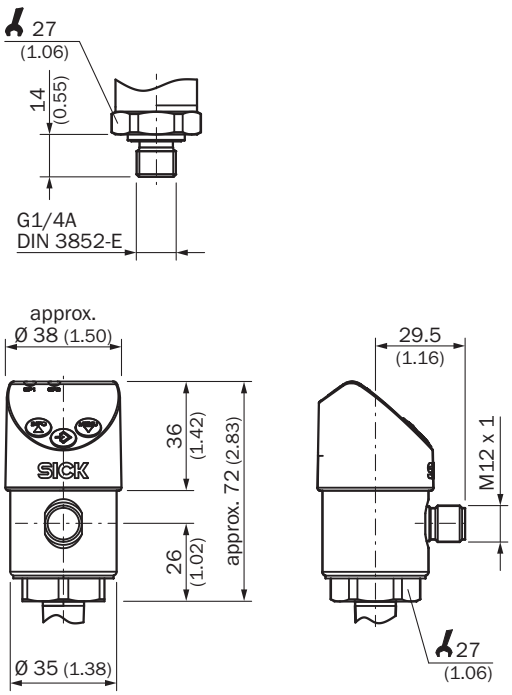

Connection type

M12 x 1, 4-pin — 2 switching outputs/ 1 switching output + 1 analog output



$L^+ = 1$, $M = 3$, $Q_1 = 4$, $Q_2 = 2$
$C/Q_1 = 4$, $Q_A = 2$

M12 x 1, 5-pin — 2 switching outputs + 1 analog output



$L^+ = 1$, $M = 3$, $Q_1 = 4$, $Q_2 = 2$, $Q_A = 5$
$C/Q_1 = 4$

SICK AT A GLANCE

SICK is one of the leading manufacturers of intelligent sensors and sensor solutions for industrial applications. A unique range of products and services creates the perfect basis for controlling processes securely and efficiently, protecting individuals from accidents and preventing damage to the environment.

We have extensive experience in a wide range of industries and understand their processes and requirements. With intelligent sensors, we can deliver exactly what our customers need. In application centers in Europe, Asia and North America, system solutions are tested and optimized in accordance with customer specifications. All this makes us a reliable supplier and development partner.

Comprehensive services complete our offering: SICK LifeTime Services provide support throughout the machine life cycle and ensure safety and productivity.

For us, that is “Sensor Intelligence.”

WORLDWIDE PRESENCE:

Contacts and other locations –www.sick.com