ONS-SC+-10G-CU1-C

Cisco® ONS-SC+-10G-CU1 Compatible TAA Compliant 10GBase-CU SFP+ Direct Attach Cable (Passive Twinax, 1m)

Features:

- Up to 10 Gbps bi-directional data links
- Compliant with 10GFC
- Compliant with SFF-8431
- AC coupled inputs and outputs
- 100 Ohm differential impedance
- Enhanced EMI design
- Single 3.3V power supply
- Operating Temperature Range: 0 to 70 Celsius
- RoHS Compliant and Lead-Free



Applications:

- 10G Ethernet
- 10G Fibre Channel
- Serial Data Transmission

Product Description

This is a Cisco® ONS-SC+-10G-CU1 Compatible 10GBase-CU SFP+ to SFP+ direct attach cable that operates over passive copper with a maximum reach of 1m. It has been programmed, uniquely serialized, and data-traffic and application tested to ensure it is 100% compliant and functional. We stand behind the quality of our products and proudly offer a limited lifetime warranty. This cable is TAA (Trade Agreements Act) compliant and is built to comply with MSA (Multi-Source Agreement) standards.

ProLabs' transceivers are RoHS compliant and lead-free.

TAA refers to the Trade Agreements Act (19 U.S.C. & 2501-2581), which is intended to foster fair and open international trade. TAA requires that the U.S. Government may acquire only "U.S. – made or designated country end products."

TAA COMPLIANT

Rev. 092023

General Specifications

Parameter	Symbol	Min.	Typ.	Max.	Unit	Notes
Data Rate	DR		10.3125		Gbps	1
Bit Error Rate	BER			10^{-12}		
Operating Temperature	Tc	0		70	°C	2
Storage Temperature	Tstg	-40		85	°C	3
Power Supply Voltage	Vcc	3.14	3.30	3.46	V	4

Notes:

1. IEEE 802.3ae.
2. Case Temperature.
3. Ambient Temperature.
4. For the electrical power interface.

Cable Specifications

Parameter	Symbol	Min.	Typ.	Max.	Unit
Wire Gauge			30AWG		AWG
Cable Impedance	Z	90	100	110	Ω
Cable Diameter	OD		4.2		mm
Minimum Bending Radius	R		25		mm
Tolerance Range ±			2		cm

Pin Descriptions

Pin	Symbol	Name/Description	Notes
1	VeeT	Transmitter Ground (Common with Receiver Ground).	1
2	Tx_Fault	Transmitter Failure Alarm. Not Used.	
3	Tx_Disable	Not Used. The signal turns off the module transmitter when it is “high” or “open.”	
4	SDA	Data Line for Serial ID.	2
5	SCL	Clock Line for Serial ID.	2
6	MOD_ABS	Module Absent. Grounded within the module.	2
7	RS0	No Connection Required.	
8	LOS	Loss of Signal Indication. “Logic 0” indicates normal operation.	
9	RS1	No Connection Required.	
10	VeeR	Receiver Ground (Common with Transmitter Ground).	1
11	VeeR	Receiver Ground (Common with Transmitter Ground).	1
12	RD-	Receiver Inverted Data Out. AC Coupled.	
13	RD+	Receiver Non-Inverted Data Out. AC Coupled.	
14	VeeR	Receiver Ground (Common with Transmitter Ground).	1
15	VccR	Receiver Power Supply.	
16	VccT	Transmitter Power Supply.	
17	VeeT	Transmitter Ground (Common with Receiver Ground).	1
18	TD+	Transmitter Non-Inverted Data In. AC Coupled.	
19	TD-	Transmitter Inverted Data In. AC Coupled.	
20	VeeT	Transmitter Ground (Common with Receiver Ground).	1

Notes:

1. The circuit ground is isolated from the chassis ground.
2. Should be pulled up with 4.7kΩ to 10kΩ on the host board to a voltage between 2V and 3.6V.

Electrical Pad Layout

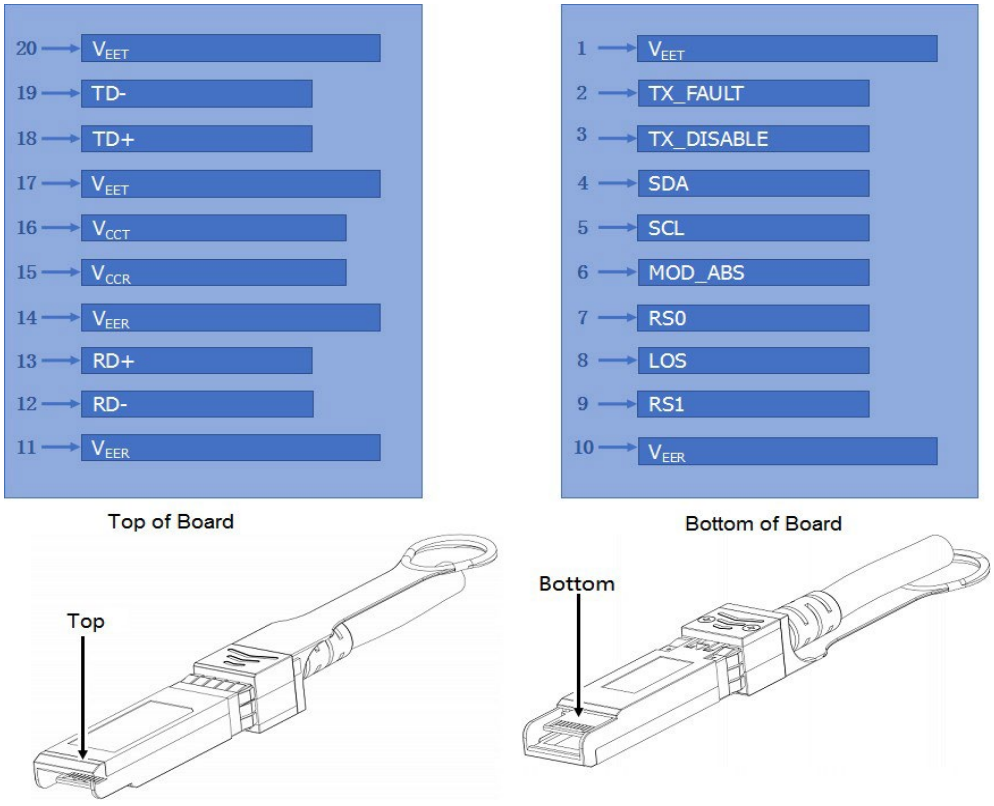

Block Diagram of Transceiver

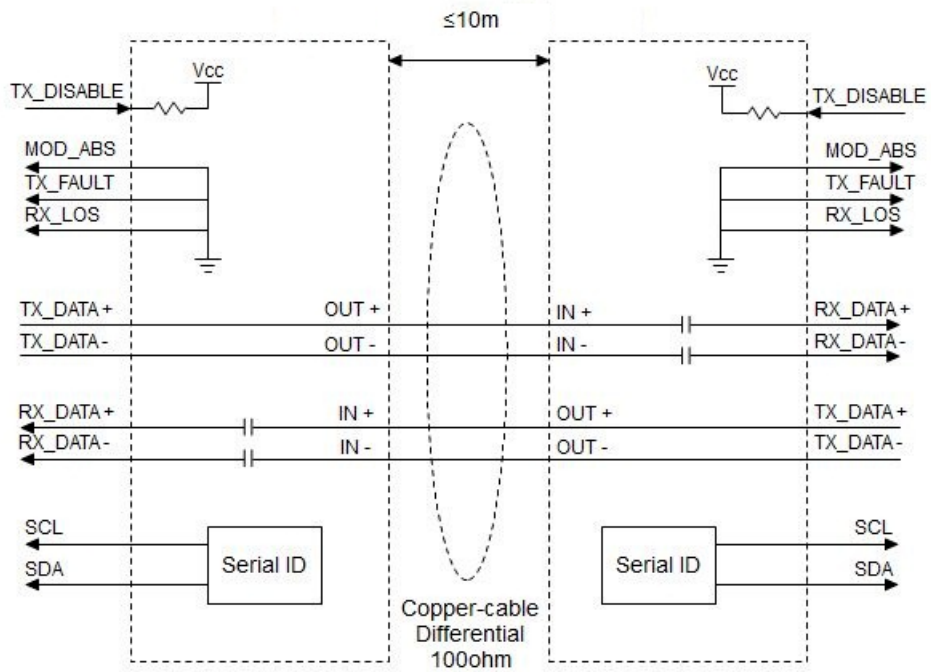

Weight

Parameter	Symbol	Typ.	Unit	Notes
30AWG Product Weight	GD30	72	g/PCS	1
30AWG Cable Weight	GC30	26	g/M	
Dust Cap Weight	GS	0.80	g/PCS	

Notes:

1. For example, the weight of a 6m cable with 30AWG is: 72+26*(6-1) + 0.80*2=203.6g.

Mechanical Specifications

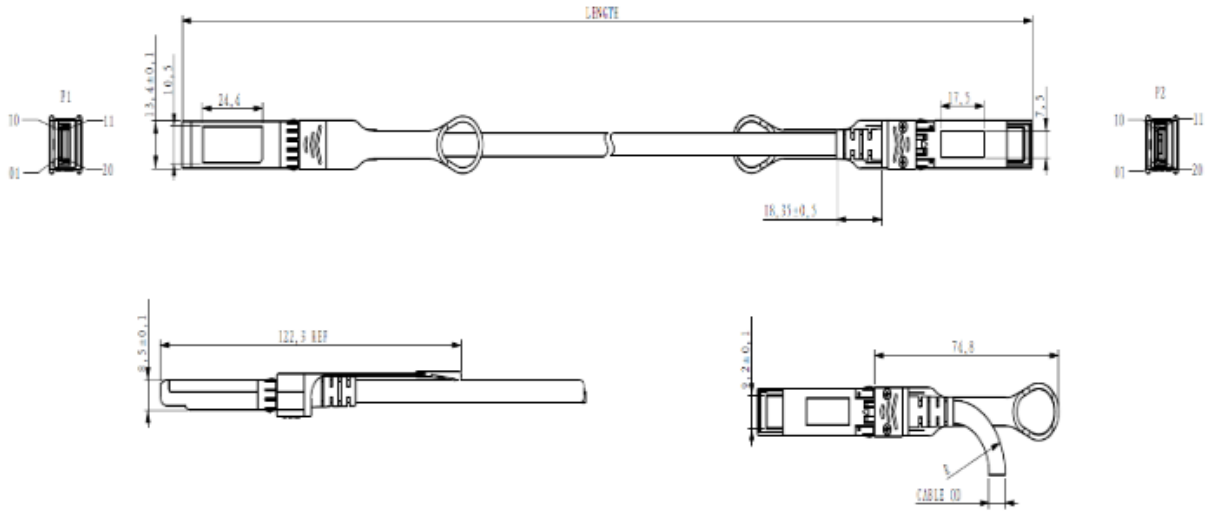

All Dimensions are ±0.2mm Unless Otherwise Specified
Unit: mm

About ProLabs

Our experience comes as standard; for over 15 years ProLabs has delivered optical connectivity solutions that give our customers freedom and choice through our ability to provide seamless interoperability. At the heart of our company is the ability to provide state-of-the-art optical transport and connectivity solutions that are compatible with over 90 optical switching and transport platforms.

Complete Portfolio of Network Solutions

ProLabs is focused on innovations in optical transport and connectivity. The combination of our knowledge of optics and networking equipment enables ProLabs to be your single source for optical transport and connectivity solutions from 100Mb to 400G while providing innovative solutions that increase network efficiency. We provide the optical connectivity expertise that is compatible with and enhances your switching and transport equipment.

Trusted Partner

Customer service is our number one value. ProLabs has invested in people, labs and manufacturing capacity to ensure that you get immediate answers to your questions and compatible product when needed. With Engineering and Manufacturing offices in the U.K. and U.S. augmented by field offices throughout the U.S., U.K. and Asia, ProLabs is able to be our customers best advocate 24 hours a day.



Contact Information

ProLabs US

Email: sales@prolabs.com
Telephone: 952-852-0252

ProLabs UK

Email: salessupport@prolabs.com
Telephone: +44 1285 719 600