1-968254-1

DO NOT USE FOR NEW DESIGN

TE Internal #: 1-968254-1

TE Internal Description: STP+JPT+MT GEH 33P

View on TE.com >

Product Compliance

For compliance documentation, visit the product page on TE.com>

EU RoHS Directive 2011/65/EU	Compliant
EU ELV Directive 2000/53/EC	Compliant
China RoHS 2 Directive MIIT Order No 32, 2016	No Restricted Materials Above Threshold
EU REACH Regulation (EC) No. 1907/2006	Current ECHA Candidate List: JAN 2024 (240) Candidate List Declared Against: JAN 2024 (240) Does not contain REACH SVHC
Halogen Content	BFR/CFR/PVC Free, but Br/Cl >900 ppm in other sources.
Solder Process Capability	Not applicable for solder process capability

Product Compliance Disclaimer

This information is provided based on reasonable inquiry of our suppliers and represents our current actual knowledge based on the information they provided. This information is subject to change. The part numbers that TE has identified as EU RoHS compliant have a maximum concentration of 0.1% by weight in homogenous materials for lead, hexavalent chromium, mercury, PBB, PBDE, DBP, BBP, DEHP, DIBP, and 0.01% for cadmium, or qualify for an exemption to these limits as defined in the Annexes of Directive 2011/65/EU (RoHS2). Finished electrical and electronic equipment products will be CE marked as required by Directive 2011/65/EU. Components may not be CE marked. Additionally, the part numbers that TE has identified as EU ELV compliant have a maximum concentration of 0.1% by weight in homogenous materials for lead, hexavalent chromium, and mercury, and 0.01% for cadmium, or qualify for an exemption to these limits as defined in the Annexes of Directive 2000/53/EC (ELV). Regarding the REACH Regulation, the information TE provides on SVHC in articles for this part number is based on the latest European Chemicals Agency (ECHA) 'Guidance on requirements for substances in articles' posted at this URL: https://echa.europa.eu/guidance-documents/guidance-on-reach

Customers Also Bought

TE Part #1717676-2

CAP ASSY,8P,BRACKET REVERSE TYPE,ATAC CO

TE Part #282762-2

JPT SPLASH-PROOF FEM.CONN2 POS

TE Part #175365-3

DYNAMIC 3500 HDR ASSY 20P

TE Part #925370-9

MOD IV REC HSG, 2X9P

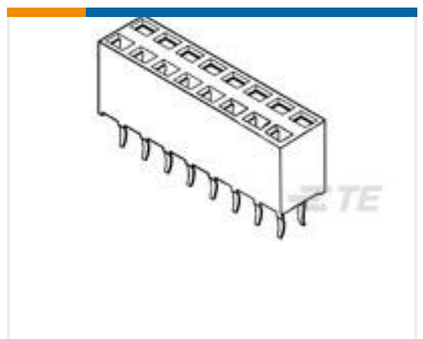

TE Part #1-215307-1
2X11P HV100 REC CON. TE, 7.0MM

TE Part #2-2289731-0
KIT, HOUSING, CPA, INLINE FEMALE, FAKRA

TE Part #2289727-1
HOUSING, CPA, INLINE FEMALE, FAKRA

TE Part #2098866-1
PLUG ASSY, 96P GPECIII KEY H L

Documents

Product Drawings

STP+JPT+MT GEH 33P

English

CAD Files

3D PDF

3D

Customer View Model

ENG_CVM_CVM_1-968254-1_B.2d_dxf.zip

English

Customer View Model

ENG_CVM_CVM_1-968254-1_B.3d_igs.zip

English

Customer View Model

ENG_CVM_CVM_1-968254-1_B.3d_stp.zip

English

By downloading the CAD file I accept and agree to the Terms and Conditions of use.