TCP 32DC/7,5A F - Thermal device circuit breaker

1499941

https://www.phoenixcontact.com/us/products/1499941

Please be informed that the data shown in this PDF document is generated from our online catalog. Please find the complete data in the user documentation. Our general terms of use for downloads are valid.



Thermal device circuit breaker, number of positions: 1, mounting type: on base element

Your advantages

- Fast, replacement part-free recommissioning after an event with the reconnection options
- Easy to retrofit in existing systems with vehicle flat-type fuses with identical pin connector pattern
- Easy identification of the nominal current value via color marking

Commercial data

Item number	1499941
Packing unit	100 pc
Minimum order quantity	100 pc
Sales key	CL27
Product key	CLA112
GTIN	4063151955878
Weight per piece (including packing)	4.65 g
Weight per piece (excluding packing)	4,252 g
Customs tariff number	85362010
Country of origin	CN

Technical data

Product properties

Product type	Thermal device circuit breakers
Type	Male
Number of positions	1
No. of channels	1

Insulation characteristics

Protection class	III

Electrical properties

General

Rated voltage	max. 32 V DC
Rated current I_N	5 A
Required backup fuse	Only required if I_{max} of the power supply > the short-circuit switching capacity.
Rated short-circuit switching capacity I_{cn}	100 A (≥3 shutdowns)
Short-circuit switching capacity	150 A (≥3 shutdowns)
	2000 A (≥ 1 switch-off)

Connection data

Connection method	pluggable

Dimensions

Dimensional drawing	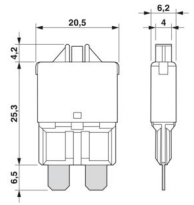
Width	6.2 mm
Height	19.7 mm
Depth	29.5 mm

Material specifications

Color	Beige gray (RAL 7006)
Material	Copper, tin-plated

Mechanical properties

Mechanical data

Open side panel	No

Environmental and real-life conditions

Ambient conditions

Degree of protection	IP30 (Actuation area)
Ambient temperature (operation)	-40 °C ... 85 °C
Ambient temperature (storage/transport)	-40 °C ... 125 °C

Mounting

Mounting type	on base element

Drawings

Dimensional drawing

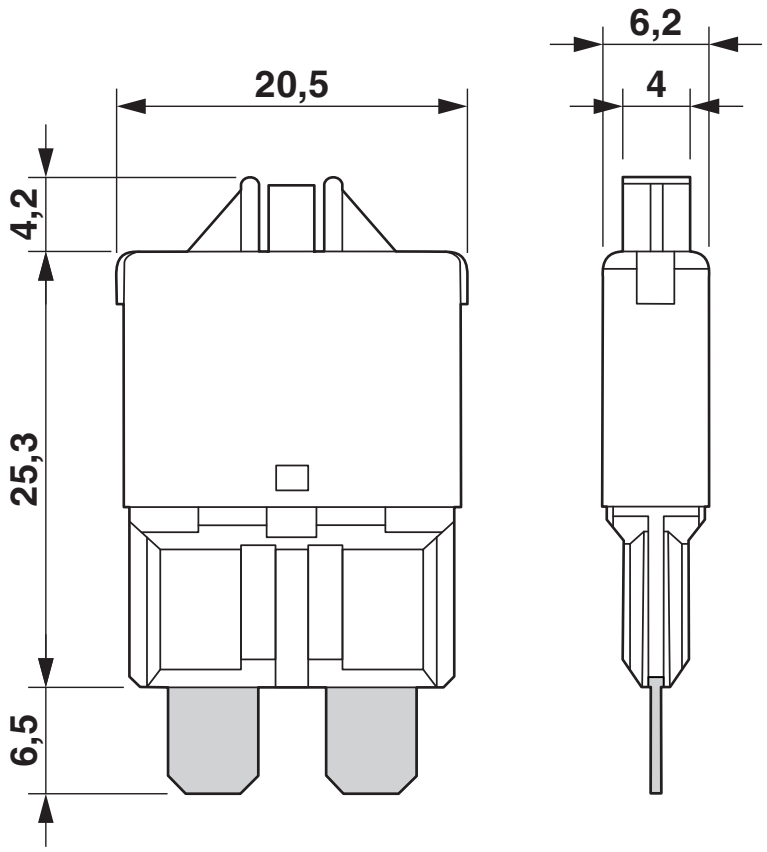

Diagram

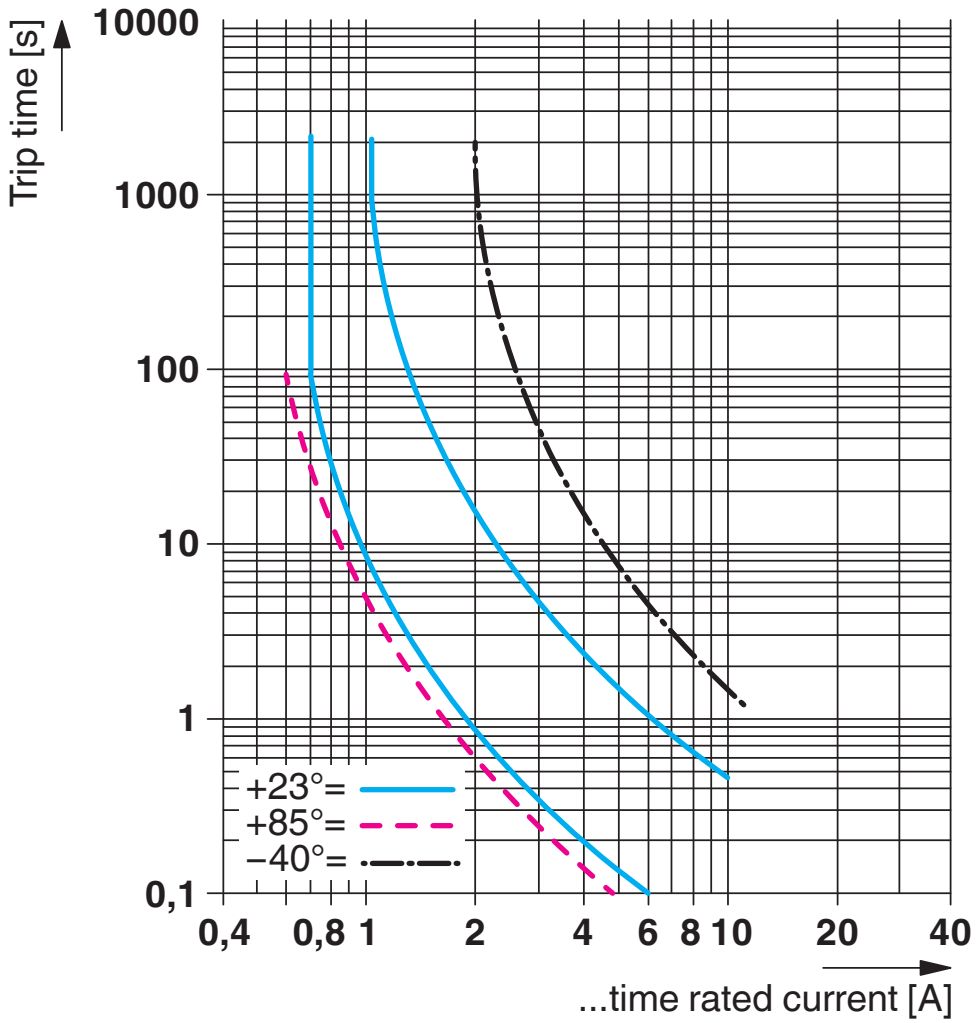

Trigger characteristic

Classifications

ECLASS

ECLASS-11.0	27140401
ECLASS-13.0	27140401

Accessories

ST 4-FSI/C - Fuse modular terminal block

3036372

https://www.phoenixcontact.com/us/products/3036372



Fuse modular terminal block, fuse type: Flat, fuse type: C, nom. voltage: 400 V, nominal current: 30 A, connection method: Spring-cage connection, 1 level, Rated cross section: 4 mm^2, cross section: 0.08 mm^2- 6 mm^2, mounting type: NS 35/7,5, NS 35/15, color: black

ST 4-FSI/C-LED 12 - Fuse modular terminal block

3036495

https://www.phoenixcontact.com/us/products/3036495



Fuse terminal block with LED for mounting on NS 35, for miniature circuit breakers, terminal width: 8.2 mm, color: Black

ST 4-FSI/C-LED 24 - Fuse modular terminal block

3036505

https://www.phoenixcontact.com/us/products/3036505



Fuse terminal block with LED for mounting on NS 35, for miniature circuit breakers, terminal width: 8.2 mm, color: Black

UK 6-FSI/C - Fuse modular terminal block

3118203

https://www.phoenixcontact.com/us/products/3118203

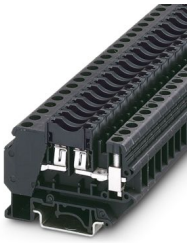

Fuse modular terminal block, fuse type: Flat, fuse type: C, nom. voltage: 250 V, nominal current: 30 A, number of positions: 1, connection method: Screw connection, 1 level, Rated cross section: 4 mm^2, cross section: 0.2 mm^2 - 10 mm^2, mounting type: NS 35/7,5, NS 35/15, NS 32, color: black

UK 6-FSI/C-LED12 - Fuse modular terminal block

3001925

https://www.phoenixcontact.com/us/products/3001925



Flat-type fuse terminal block, cross section: 0.2 - 6 mm^2, AWG: 26 - 8, width: 8.2 mm, color: black, with light indicator, voltage light indicator: 12 V DC, current light indicator: 2 mA

UK 6-FSI/C-LED24 - Fuse modular terminal block

3001938

https://www.phoenixcontact.com/us/products/3001938



Flat-type fuse terminal block, cross section: 0.2 - 6 mm^2, AWG: 26 - 8, width: 8.2 mm, color: black, with light indicator, voltage light indicator: 24 V DC, current light indicator: 2 mA

PT 6-FSI/C - Fuse modular terminal block

3212166

https://www.phoenixcontact.com/us/products/3212166



Fuse modular terminal block, fuse type: Flat, fuse type: Type C / max. 2.2 W, nom. voltage: 400 V, nominal current: 25 A, connection method: Push-in connection, Rated cross section: 6 mm^2, cross section: 0.5 mm^2 - 10 mm^2, mounting type: NS 35/7,5, NS 35/15, color: black

PT 6-FSI/C-LED 12 - Fuse modular terminal block

3212169

https://www.phoenixcontact.com/us/products/3212169



Fuse modular terminal block, fuse type: Flat, fuse type: Type C / max. 2.2 W, nom. voltage: 12 V, nominal current: 25 A, connection method: Push-in connection, Rated cross section: 6 mm^2, cross section: 0.5 mm^2 - 10 mm^2, mounting type: NS 35/7,5, NS 35/15, color: black

TCP 32DC/7,5A F - Thermal device circuit breaker

1499941

https://www.phoenixcontact.com/us/products/1499941

PT 6-FSI/C-LED 24 - Fuse modular terminal block

3212172

https://www.phoenixcontact.com/us/products/3212172



Fuse modular terminal block, fuse type: Flat, fuse type: Type C / max. 2.2 W, nom. voltage: 24 V, nominal current: 25 A, connection method: Push-in connection, Rated cross section: 6 mm^2, cross section: 0.5 mm^2 - 10 mm^2, mounting type: NS 35/7,5, NS 35/15, color: black

Phoenix Contact 2024 © - all rights reserved
https://www.phoenixcontact.com

Phoenix Contact USA
586 Fulling Mill Road
Middletown, PA 17057, United States
(+717) 944-1300
info@phoenixcon.com