PDC-3P-138MS/ 1,0-U80/138FS - Power cable

1423192

https://www.phoenixcontact.com/us/products/1423192

Please be informed that the data shown in this PDF document is generated from our online catalog. Please find the complete data in the user documentation. Our general terms of use for downloads are valid.



Power cable, 3-position, plug straight 1-3/8"-16UN, coding: Standard, on Socket straight 1-3/8"-16UN, coding: Standard, cable length: 1 m

Commercial data

Item number	1423192
Packing unit	1 pc
Sales key	BF14
Product key	BF1INA
GTIN	4067923052505
Weight per piece (including packing)	22.22 g
Weight per piece (excluding packing)	22.22 g
Country of origin	MX

Technical data

Product properties

Number of positions	3
Shielded	no

Material specifications

Flammability rating according to UL 94	V0
Material of grip body	Thermoplastic
Contact material	CuZn
Contact surface material	Au
Contact carrier material	Thermoplastic
Material for screw connection	Anodized aluminum

Electrical properties

Insulation resistance	5000 MΩ
Nominal voltage U_N	600 V AC
Nominal current I_N	30 A (UL 2237)

Mechanical properties

Mechanical data

Insertion/withdrawal cycles	500

Connector

Connection 2

Type	Socket straight 1-3/8"-16UN
Coding type	Standard

Cable/line

Cable length	1 m

TC-ER/600V [U80]

Shielded	no
Cable type	TC-ER/600V
Cable type (abbreviation)	U80
External cable diameter	12.00 mm
Outer sheath, material	TPE
External sheath, color	black
Conductor material	Bare Cu litz wires
Conductor cross section	3 x AWG 10
Material wire insulation	PVC
Single wire, color	black 1, green 2, white 3
Overall twist	3 wires, twisted

Nominal voltage, cable	600 V
Resistance to oil	yes
Flame resistance	FT4
Other resistance	Wet locations
Ambient temperature (operation)	-40 °C ... 90 °C (cable, fixed installation)

Environmental and real-life conditions

Ambient conditions

Degree of protection	IP67
Ambient temperature (operation)	-40 °C ... 90 °C (Plug / socket)
	-40 °C ... 90 °C (cable, fixed installation)

Standards and regulations

Standards/specifications	UL 2237
Note	SCCR 65KA
Standard designation	Vibration
Standards/specifications	MIL-STD-202 method 204
Standard designation	Thermal shock
Standards/specifications	MIL-STD-202 method 207
Standard designation	48 hour salt spray
Standards/specifications	MIL-STD-202 method 101

Drawings

Circuit diagram

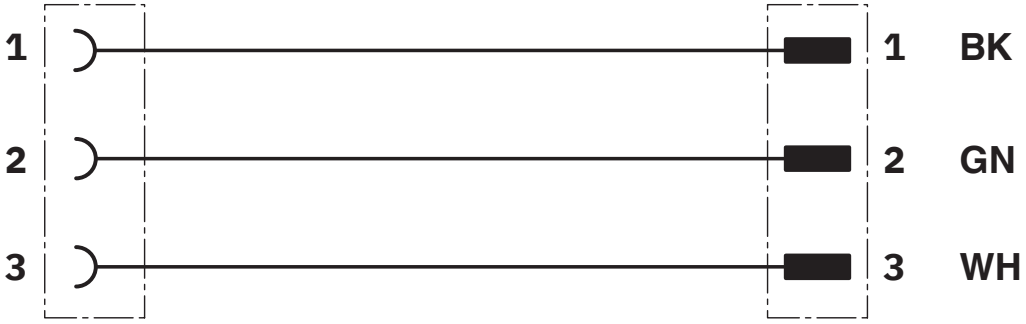

Schematic diagram

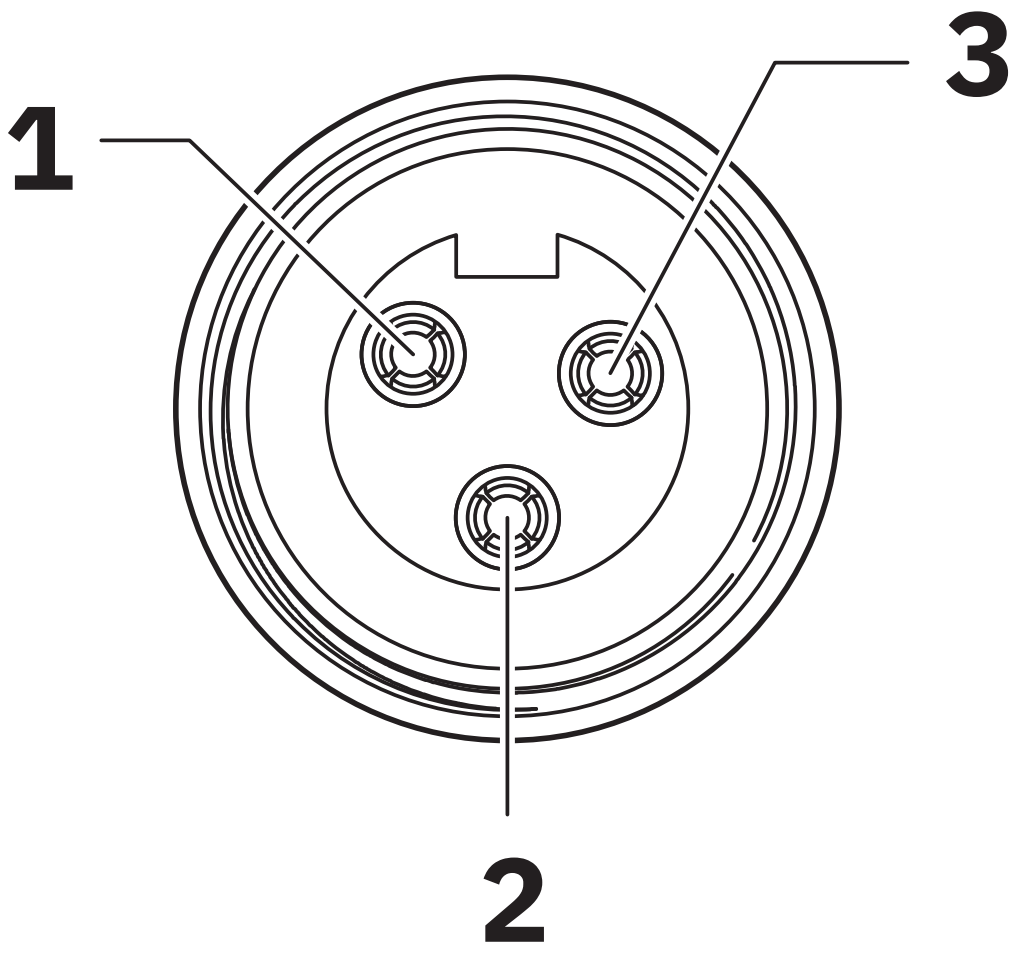

Pin assignment, socket, 1-3/8"-16UN, 3-pos., view of female side

Dimensional drawing

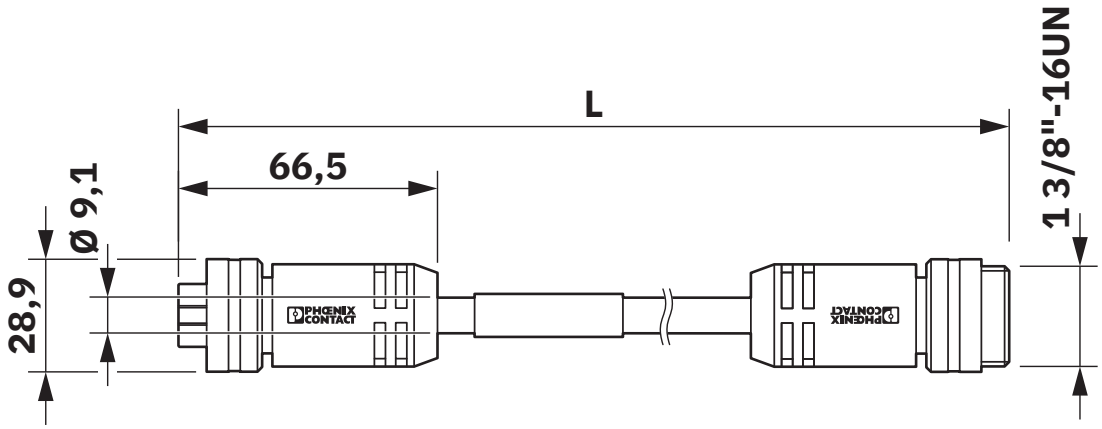

1-3/8"-16UN cordset

Schematic diagram

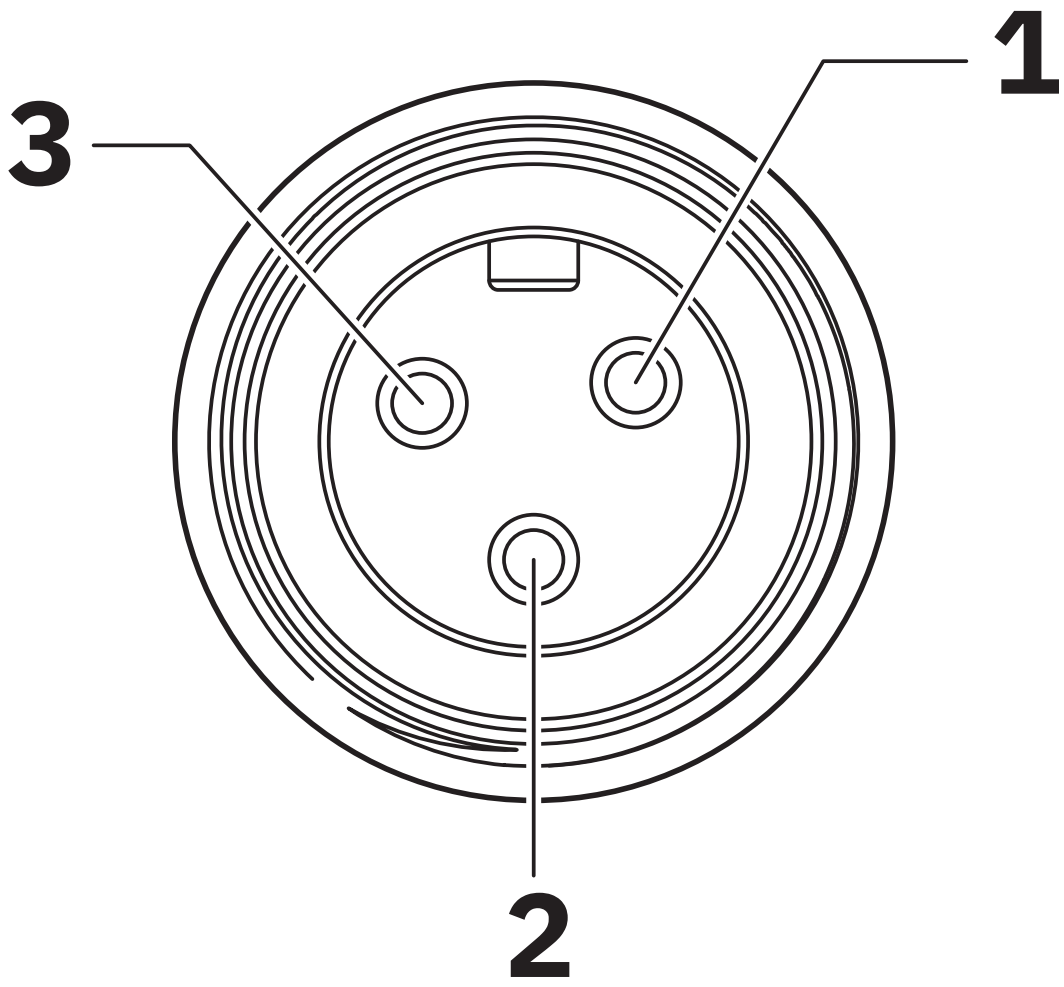

Pin assignment, plug, 1-3/8"-16UN, 3-pos., view of male side

Classifications

ECLASS

ECLASS-11.0	27060311
ECLASS-13.0	27060311

Environmental product compliance

EU RoHS

Fulfills EU RoHS substance requirements	Not applicable, Not qualified for the European market

China RoHS

Environment friendly use period (EFUP)	EFUP-50
	An article-related China RoHS declaration table can be found in the download area for the respective article under "Manufacturer declaration". For all articles with EFUP-E, no China RoHS declaration table issued and required.

EU REACH SVHC

REACH candidate substance (CAS No.)	No substance above 0.1 wt%

Phoenix Contact 2024 © - all rights reserved
https://www.phoenixcontact.com

Phoenix Contact USA
586 Fulling Mill Road
Middletown, PA 17057, United States
(+717) 944-1300
info@phoenixcon.com