SSM009B2N ✔ ACTIVE

Nanonics

TE Internal #: 1589460-7

Microminiature & Nanominiature D Connectors, Plug, Wire-to-Board, 9 Position, .025 in [.64 mm] Centerline, Printed Circuit Board, Power, Board Mount

View on TE.com >

Connectors > D-Shaped Connectors > Microminiature & Nanominiature D Connectors > NANONICS DUALOBE Connector: Plug, Metal Shell

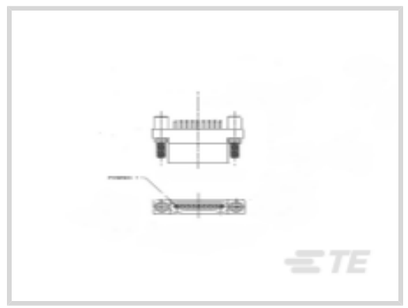

Connector & Housing Type: **Plug**

Connector System: **Wire-to-Board**

Number of Positions: **9**

Centerline (Pitch): **.64 mm [.025 in]**

Sealable: **No**

All NANONICS DUALOBE Connector: Plug, Metal Shell (33)

Features

Product Type Features

Connector & Housing Type	Plug
Connector System	Wire-to-Board
Sealable	No
Connector & Contact Terminates To	Printed Circuit Board

Configuration Features

Number of Positions	9

Contact Features

Contact Options	Installed
Contact Type	Pin

Termination Features

Termination Method to Printed Circuit Board	Surface Mount
Termination Method to Wire & Cable	Preterminated Flying Leads

Mechanical Attachment

Connector Mounting Type	Board Mount

Housing Features

Centerline (Pitch)	.64 mm[.025 in]

Operation/Application

Circuit Application	Power

Product Compliance

For compliance documentation, visit the product page on TE.com>

EU RoHS Directive 2011/65/EU	Not Compliant
EU ELV Directive 2000/53/EC	Not Compliant
China RoHS 2 Directive MIIT Order No 32, 2016	Restricted Materials Above Threshold
EU REACH Regulation (EC) No. 1907/2006	Current ECHA Candidate List: JAN 2024 (240) Candidate List Declared Against: JAN 2022 (223) SVHC > Threshold: Pb (40% in Component Part) **Article Safe Usage Statements:** Do not eat, drink or smoke when using this product. Wash thoroughly after handling. Recycle if possible and dispose of the article by following all applicable governmental regulations relevant to your geographic location.
Halogen Content	Low Halogen - Br, Cl, F, I < 900 ppm per homogenous material. Also BFR/CFR/PVC Free
Solder Process Capability	Not lead free process capable

Product Compliance Disclaimer

This information is provided based on reasonable inquiry of our suppliers and represents our current actual knowledge based on the information they provided. This information is subject to change. The part numbers that TE has identified as EU RoHS compliant have a maximum concentration of 0.1% by weight in homogenous materials for lead, hexavalent chromium, mercury, PBB, PBDE, DBP, BBP, DEHP, DIBP, and 0.01% for cadmium, or qualify for an exemption to these limits as defined in the Annexes of Directive 2011/65/EU (RoHS2). Finished electrical and electronic equipment products will be CE marked as required by Directive 2011/65/EU. Components may not be CE marked. Additionally, the part numbers that TE has identified as EU ELV compliant have a maximum concentration of 0.1% by weight in homogenous materials for lead, hexavalent chromium, and mercury, and 0.01% for cadmium, or qualify for an exemption to these limits as defined in the Annexes of Directive 2000/53/EC (ELV). Regarding the REACH Regulation, the information TE provides on SVHC in articles for this part number is based on the latest European Chemicals Agency (ECHA) 'Guidance on requirements for substances in articles' posted at this URL: https://echa.europa.eu/guidance-documents/guidance-on-reach

Compatible Parts

TE Part # 1589666-4
302-0009-01 = CLEADFRAME

Customers Also Bought

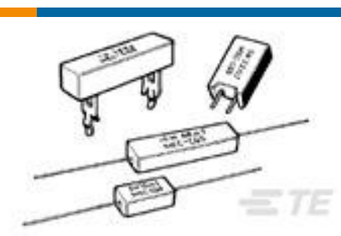

TE Part #2-1623795-3
SQP2 R047 5% WIRE



TE Part #1-1630019-4
HSC200 2K4 5%

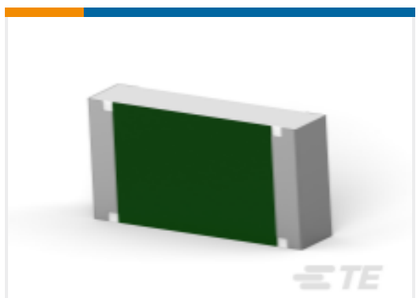

TE Part #9-2176397-4
3502 7K5 1%

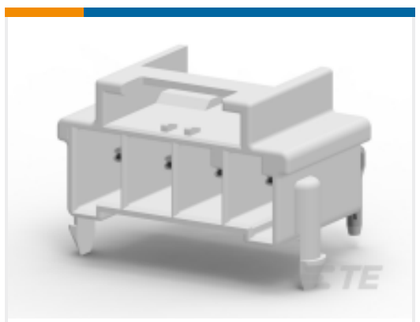

TE Part #1-1969694-4
PTL 1X4 PCB HEADER R/A HITEMP KEY A LGR



TE Part #YD369-B99-AP400000
Rectangular Connectors: 9-Way Panel Mount, 90PCB



TE Part #YDTS24T15-18PNV001
RECP ASSY



TE Part #YDTS24T21-35SNV001
RECP ASSY

Documents

Product Drawings

SSM009B2N = SMT CONN

English

CAD Files

3D PDF

3D

Customer View Model

ENG_CVM_CVM_1589460-7_J.2d_dxf.zip

English

Customer View Model

ENG_CVM_CVM_1589460-7_J.3d_igs.zip

English

Customer View Model

ENG_CVM_CVM_1589460-7_J.3d_stp.zip

English

By downloading the CAD file I accept and agree to the Terms and Conditions of use.

Datasheets & Catalog Pages

1589460 Nanonics Cross Reference

English