Your Expert Partner for **Human Machine Interfaces**

Enclosure

Distribution by
DigiKey

45-450.2803

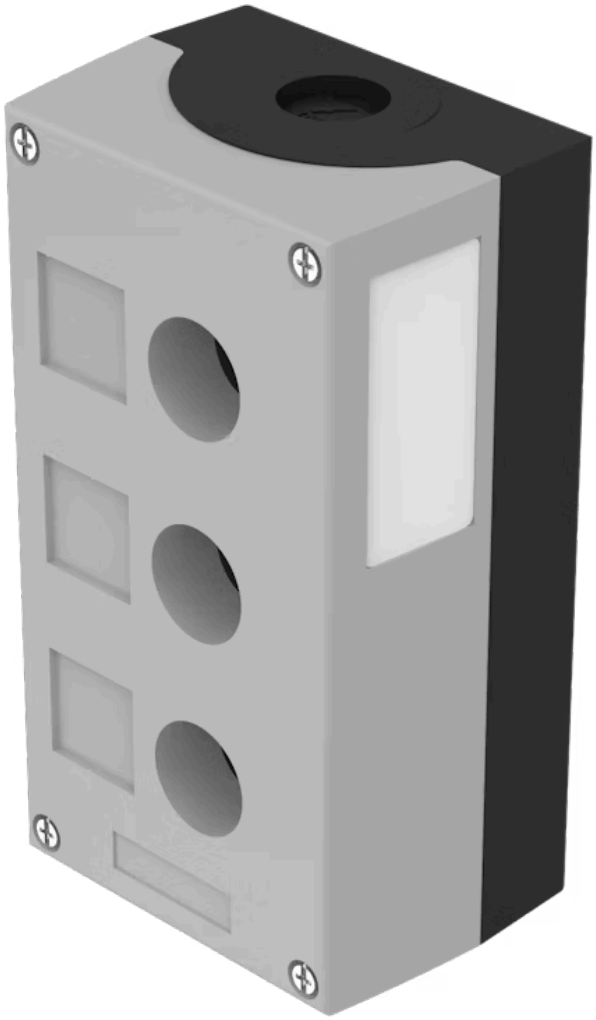

https://digikey.eao.com/p/45-450.2803

Your product:



45-450.2803
Enclosure

FRONT

Colour: Grey

MECHANICAL CHARATERISTIC

Weight: 0.683 kg

AMBIENT CONDITION

IP Protection: IP66, IP67, IP69K

OTHER

Short Description: Enclosure, 158 mm x 85 mm x 64 mm, Metal, Grey

Dimension: 158 mm x 85 mm x 64 mm

Material: Metal

Titel Accessory: Enclosure

Dimension drawings:

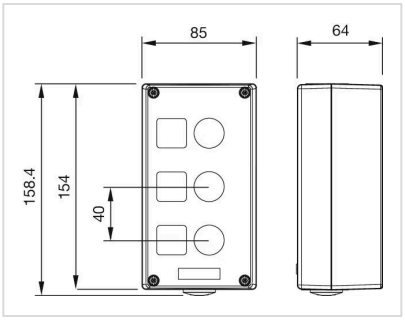

Mounting cut-outs:

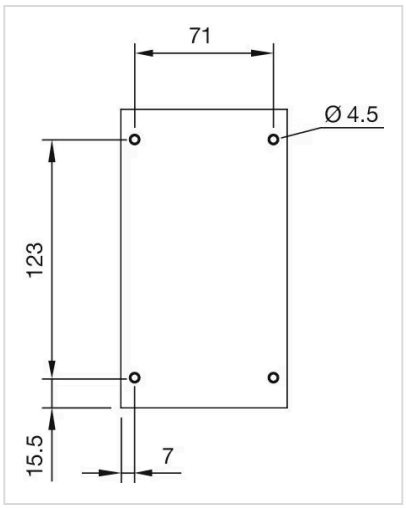
71
Ø 4.5
123
15.5
7