PDCC-MINFS-4CON - Connector

1559243

https://www.phoenixcontact.com/us/products/1559243

Please be informed that the data shown in this PDF document is generated from our online catalog. Please find the complete data in the user documentation. Our general terms of use for downloads are valid.



Connector, 4-position, Socket straight 7/8"-16UNF, coding: A, Screw connection, knurl material: Nickel-plated brass, external cable diameter 8 mm ... 17 mm

Commercial data

Item number	1559243
Packing unit	1 pc
Sales key	BF37
Product key	BF2ICB
GTIN	4067923039629
Weight per piece (including packing)	22.22 g
Weight per piece (excluding packing)	22.22 g
Country of origin	US

Technical data

Notes

Assembly note	with packaging

Trade restriction

CE note	The products are offered exclusively for export outside the EU and the European Economic Area.

Product properties

Product type	Circular connector (cable-side)
Number of positions	4
Shielded	no

Dimensions

External dimensions

Outside diameter	8 mm ... 17 mm

Material specifications

Seal material	NBR
Material of grip body	Black polyamide
Contact material	CuZn
Contact surface material	Au
Contact carrier material	PVC
Material for screw connection	Nickel-plated brass

Connection data

Conductor connection

Connection method	Screw connection
Connection cross section AWG	22 ... 14
Tightening torque	7/8" connector

Electrical properties

Nominal voltage U_N	600 V
Nominal current I_N	15 A (14AWG), 10 A (16AWG), 8 A (18AWG), 4 A (20-22AWG)

Connector

Connection 1

Head design	Socket
Head cable outlet	straight
Head thread type	7/8"-16UNF
Coding	A

Environmental and real-life conditions

Ambient conditions

Degree of protection	IP67

Standards and regulations

Standards/specifications	UL 2238

Drawings

Dimensional drawing

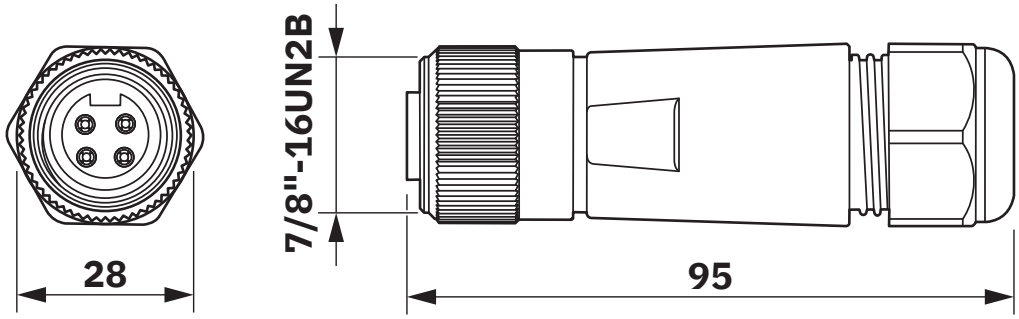

Socket 7/8"-16UNF, straight

Schematic diagram

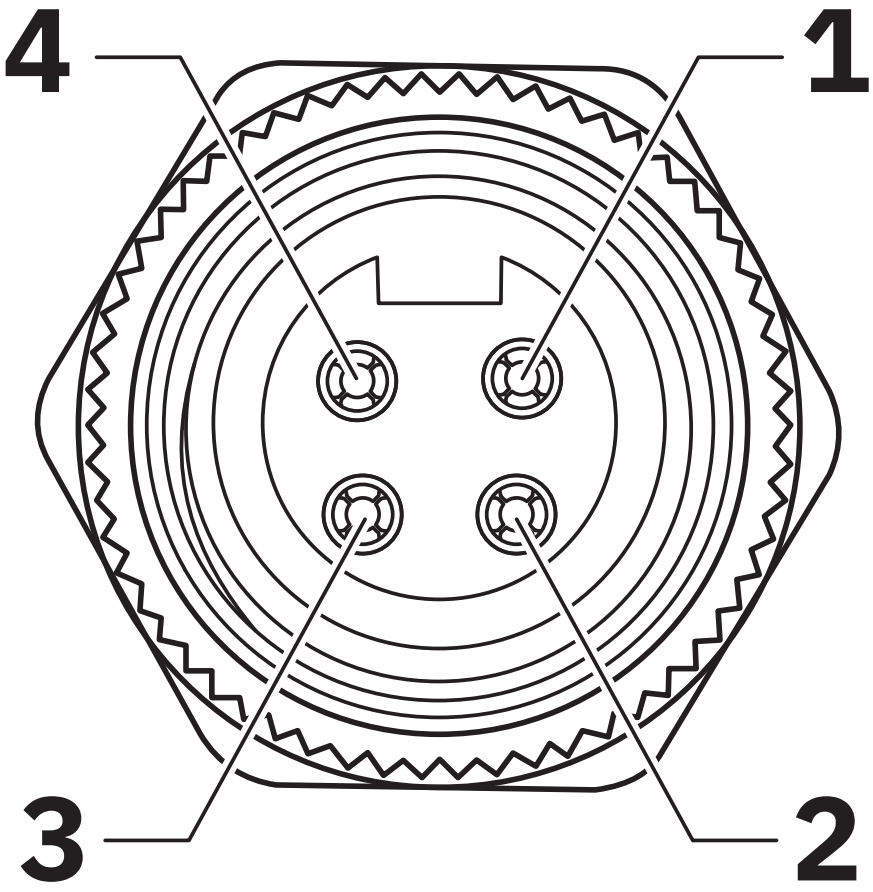

Pin assignment, socket, 7/8"-16UNF, 4-pos., view of female side

Approvals

To download certificates, visit the product detail page: https://www.phoenixcontact.com/us/products/1559243

cULus Listed
Approval ID: E221474

	Nominal voltage U_N	Nominal current I_N	Cross section AWG	Cross section mm^2
	600 V	-	- 15	-

Classifications

ECLASS

ECLASS-11.0	27440102
ECLASS-13.0	27440116

Environmental product compliance

EU RoHS

Fulfills EU RoHS substance requirements	Yes
Exemption	6(c)

China RoHS

Environment friendly use period (EFUP)	EFUP-50
	An article-related China RoHS declaration table can be found in the download area for the respective article under "Manufacturer declaration". For all articles with EFUP-E, no China RoHS declaration table issued and required.

EU REACH SVHC

REACH candidate substance (CAS No.)	Lead(CAS: 7439-92-1)

Phoenix Contact 2024 © - all rights reserved
https://www.phoenixcontact.com

Phoenix Contact USA
586 Fulling Mill Road
Middletown, PA 17057, United States
(+717) 944-1300
info@phoenixcon.com