Ratings
Voltage: 300 V
Temperature
Static: -40 to105 °C
Dynamic: -20 to 105 °C
Flammability: VW-1
Water resistant: 75 °C
Oil resistant: 60 °C (jacket)
≥50% elongation and tensile strength after aging
UV resistance: jacket, 720 hours xenon or carbon arc exposure
≥80% tensile strength and elongation after aging

Conductor
Conductor count: 4
Gauge: 18 AWG 0.82 mm²
Material: tinned copper strands
Strand size: Ø 0.16 mm x 41
Resistance at 20 °C: 23.2 Ω /km Max

Insulator
Material: PVC
Color: red, black, white, green
Diameter: ∅2.1 ±0.10 mm
Nominal thickness: 0.38 mm
Resistance at 20 °C: 10 MΩ /km Min

Wrap
Material: Cotton paper

Outer jacket
Material: PVC, 80A
Color: Black
Diameter: ∅6.8 ±0.20 mm
Nominal thickness: 0.80 mm

Wire marking: E339579 UL AWM STYLE 20387 18 AWG 105°C 300V VW-1 60°C OIL RESISTANT UV RESISTANT TENSILITY

Use: External wiring

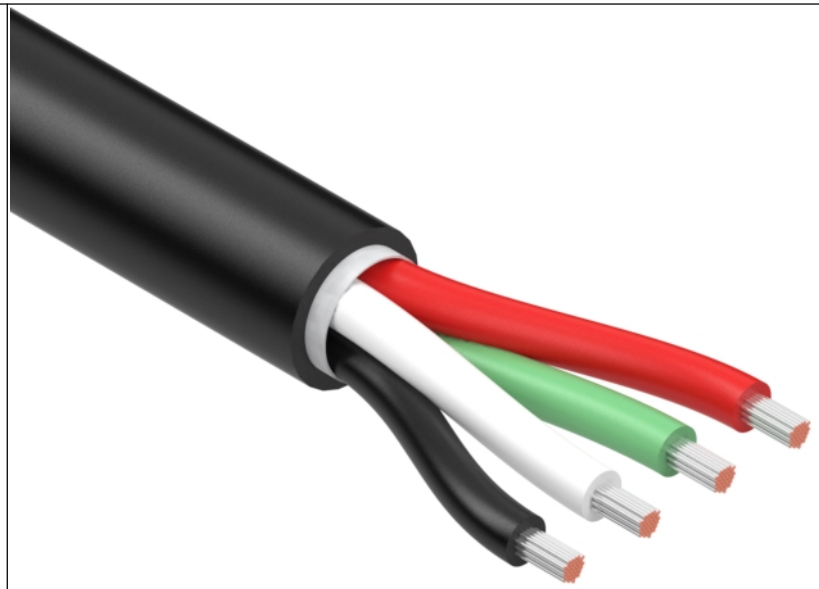

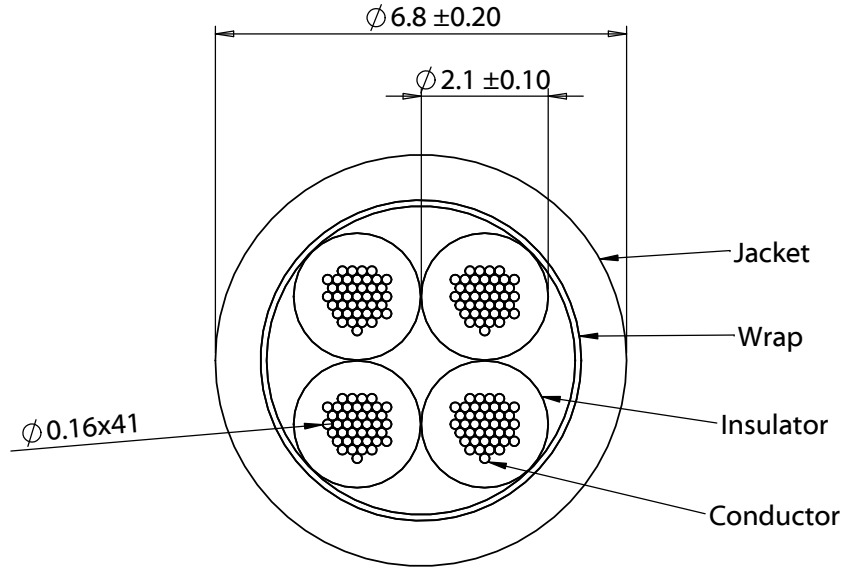

Revision:	Date:	Description:
A	11/01/2023	Initial release

Prepared: BL Digitally signed by BL Date: 2023.11.01 08:33:28 -07'00'

Verified: KW Digitally signed by KW Date: 2023.11.02 11:48:56 -07'00'

Dimensions are in millimeters.
Tolerances:
X: ± 0.5 mm
X.X: ± 0.3 mm
X.XX: ± 0.05 mm

Notes:

RoHS compliant

Function test: no open, no short circuit, no intermittent

Description:
Wire, 4C TS, 18 AWG, UL20387, 300V, 105C, 60C oil, UV, 6.8 mm, VW-1, PVC, 80A, black

TENSILITY
tel 1.541.323.3228 800 877.670.7118
fax 1.541.323.4202 web tensility.com

Size: A
Part number: 30-03383
Scale: 8:1
Sheet 1 of 1

To see a custom version of this cable assembly, call Tensility at 541-323-3228 or email engineering@tensility.com

5 4 3 2 1