Your Expert Partner for **Human Machine Interfaces**

Actuator

Distribution by
DigiKey

704.300.000I



https://digikey.eao.com/p/704.300.000I

Your product:



704.300.000I
Actuator

FRONT

Front dimension:	35 mm x 35 mm
Front bezel material:	Plastic
Front bezel colour:	Black

MOUNTING

Design:	flush
Mounting cut-out:	30 mm x 30 mm

OPERATING-/INDICATION PART

Lever shape:	long
Lever material:	plastic
Lever colour:	Black

ELECTRICAL CHARACTERISTICS

Standards:	The switches comply with the “Standards for low-voltage switching devices” DIN EN 60947-1

MECHANICAL CHARATERISTIC

Switching positions:	2 positions
Switching action:	Rest - Maintained
Switching angle:	90° right
Weight:	0.056 kg
Mechanical lifetime:	≤2.5 Mio. cycles of operation

AMBIENT CONDITION

Storage temperature:	– 40 °C ... + 85 °C
Operating temperature:	– 40 °C ... + 55 °C
IP Protection:	IP65 front side

OTHER

Hints:	Max. 3 switching elements can be clipped on
Short Description:	Actuator, 30 mm x 30 mm, 35 mm x 35 mm, optional illuminative, Black, long, Black, Plastic, Rest - Maintained
max. number of switching elements:	3

Wiring diagrams:

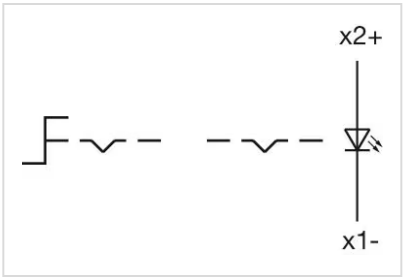

Switching positions:

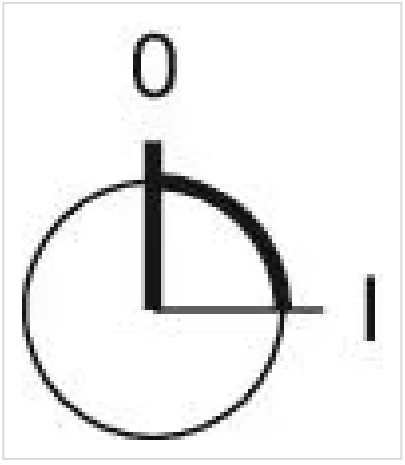

Mounting cut-outs:

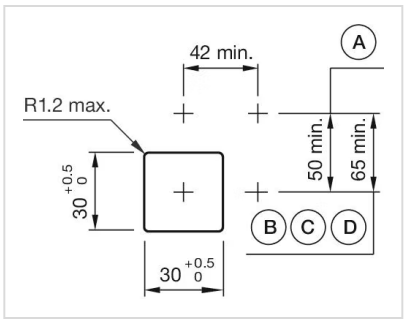

Dimension drawings:

