DESCRIPTION: M12 // F // 8P // REAR PANEL // XCODE ROTATED // RA

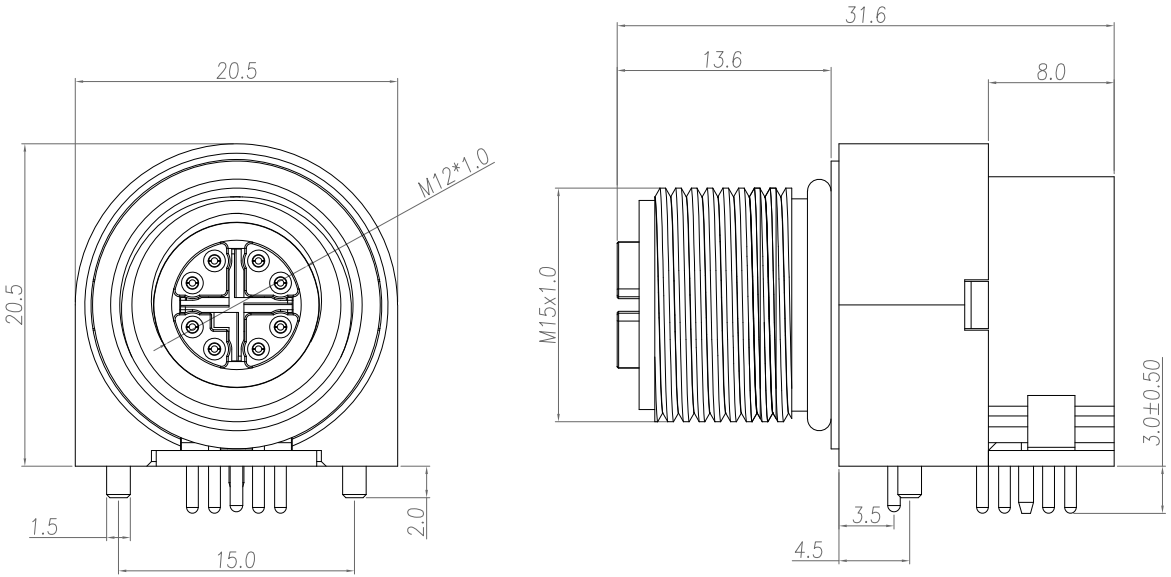

NOTE:

MATERIAL	
HOUSING:	PA66, UL94V-0, BLACK
CONTACT:	BRASS
NUT:	BRASS
SHELL:	BRASS
O-RING:	EPDM, BLACK
X-SHELL:	ZINC ALLOY
BACK & DOWN HOUSING:	PBT, UL94V-0, BLACK
GROUND:	BRASS
FINISH	
CONTACT:	GOLD 10u" MIN. OVER 50u" NICKEL
NUT:	NICKEL PLATED
SHELL:	NICKEL PLATED
X-SHELL:	NICKEL PLATED
GROUND:	TIN PLATED
ELECTRICAL	
RATED CURRENT:	0.5A
RATED VOLTAGE:	50VAC/60VDC
INSULATION RESISTANCE:	100 MOhms MIN.
CONTACT RESISTANCE:	10 mOhms MAX.
WATER PROOF:	IP67
ENVIRONMENT	
OPERATION TEMPERATURE:	-40°C TO +85°C

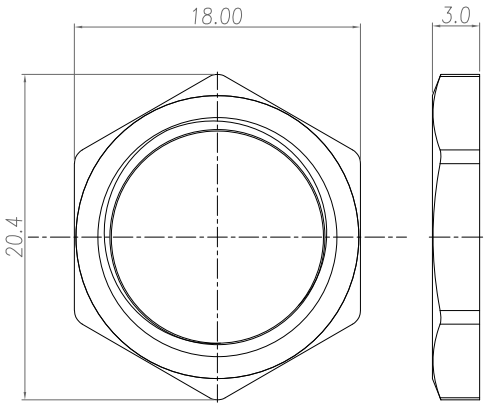

NUT

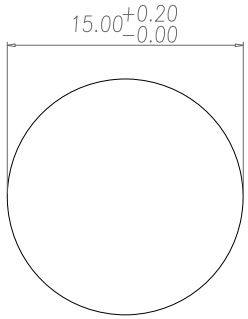

RECOMMENDPANEL CUT-OUT

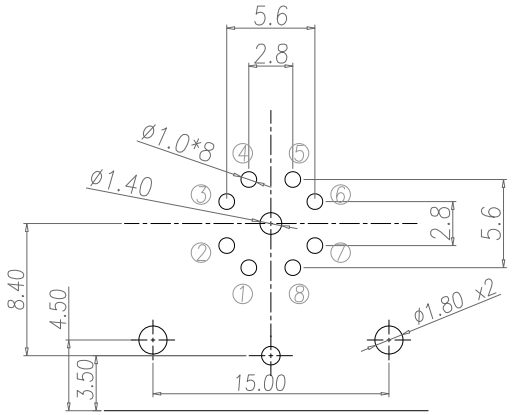

RECOMMEND P.C.B LAYOUT

RoHS COMPLIANT

UNITS = mm

DO NOT SCALE FROM DRAWING

THESE DRAWINGS AND SPECIFICATIONS ARE THE PROPERTY OF NorComp AND SHALL NOT BE REPRODUCED, COPIED OR USED AS THE BASIS FOR THE MANUFACTURE OR SALE OF APPARATUS WITHOUT WRITTEN PERMISSION.

DRAWN:	J. KADEL
DATE:	10/18/2021

NorComp

SCALE: NTS	SHEET 1 OF 1	REV 0
DWG NO. 861-X08-213R0R4		