MURR ELEKTRONIK
stay connected

M12 female 90° A-cod. with cable

PUR 12x0.14 bk UL/CSA+drag ch. 5m

Female 90°
M12, 12-pole
Art-No. 7005 - M12 Lite - (plastic hexagonal screw) on request
with cable sleeves
Plastic housings with good resistance against chemicals and oils.
The resistance to aggressive media should be individually tested for your application. Further details on request.
Further cable lengths on request.

Link to Product

Illustration

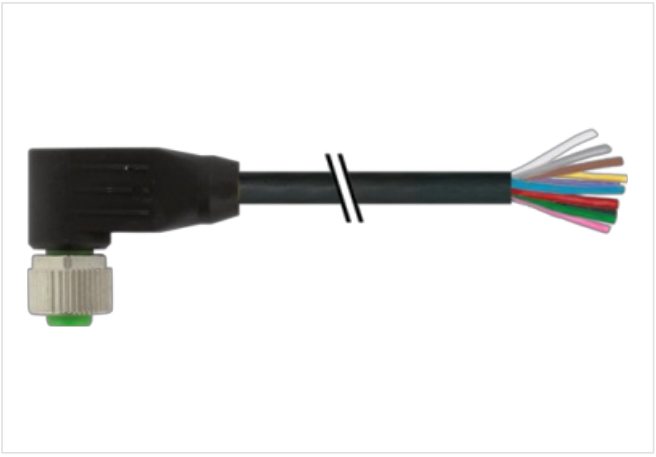

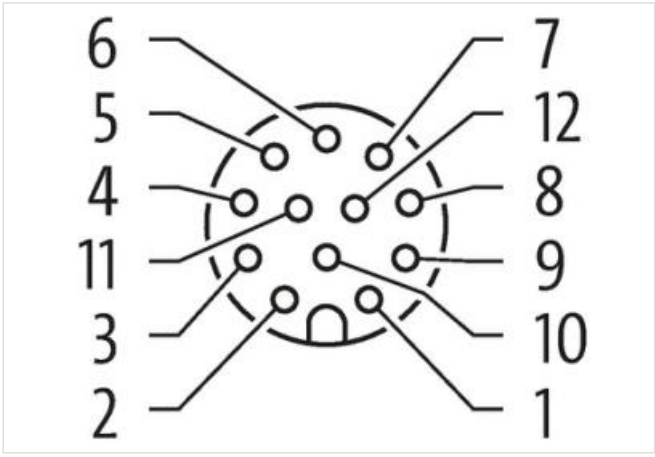

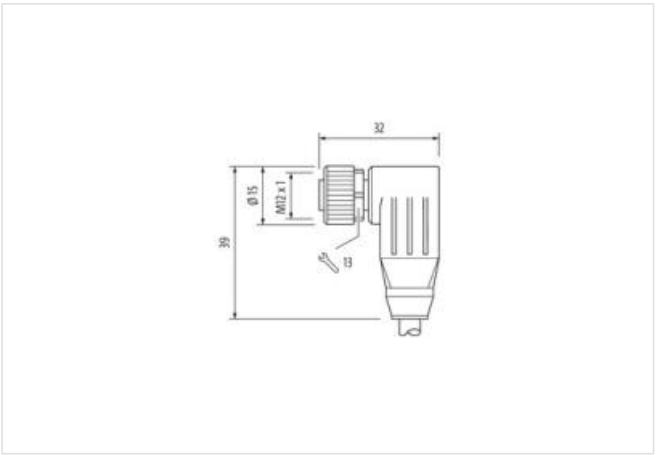

Product may differ from Image

Cable length	5 m

Side 1

Tightening torque	0,6 Nm

The information in this Product-PDF has been compiled with the utmost care.
Liability for the correctness completeness and topicality of the information is restricted to gross negligence. Version: 2024-06-18

MURR ELEKTRONIK
stay connected

Mounting method	inserted, screwed
Family construction form	M12
Coding	A
Material	PUR
No. of poles	12
Width across flats	SW13
Degree of protection (EN IEC 60529)	IP65, IP66K, IP67
Commercial data	
ECLASS-6.0	27279218
ECLASS-6.1	27279218
ECLASS-7.0	27279218
ECLASS-8.0	27279218
ECLASS-9.0	27060311
ECLASS-10.1	27060311
ECLASS-11.1	27060311
ECLASS-12.0	27060311
ETIM-5.0	EC001855
customs tariff number	85444290
GTIN	4048879188951
Packaging unit	1
Electrical data | Supply	
Operating voltage AC max.	30 V
Operating voltage DC max.	30 V
Operating voltage AC (UL-listed)	30 V
Operating voltage DC (UL-listed)	30 V
Current operating per contact max.	1,5 A
Installation | Connection	
Mounting set	M12 x 1
Device protection | Electrical	
Additional condition protection degree	inserted, screwed
Pollution Degree	3
Rated surge voltage	0,8 kV
Material group (IEC 60664-1)	I
Mechanical data | Material data	
Coating locking	Nickeled
Coating of fitting	nickel plated
Locking material	Zinc die-casting
Material screw connection	Zinc die-casting
Mechanical data | Mounting data	
Mounting method	inserted, screwed, Shaking protection
Environmental characteristics | Climatic	
Operating temperature min.	-25 °C
Operating temperature max.	85 °C
Additional condition temperature range	depending on cable quality
Important installation notes	
Note on strain relief	Protect the connectors by suitable measures from mechanical loads, e.g. by the usage of cable ties.
Note on bending radius	**Attention:** Observe the permissible bending radii when laying cables, as the IP protection class can be endangered by excessive bending forces.
Conformity	
Product standard	DIN EN 61076-2-101 (M12)
Installation | Cable	

The information in this Product-PDF has been compiled with the utmost care.
Liability for the correctness completeness and topicality of the information is restricted to gross negligence. Version: 2024-06-18

MURR ELEKTRONIK
stay connected

wire arrangement	gray-pink, violet, red-blue, (brown, red, gray, black, yellow, pink, green, white, blue)
Cable identification	705
Jacket Color	black
Type of Certificate	cURus
Amount stranding	1
Stranding	3 wires twisted
Amount stranding (type 2)	1
Stranding (type 2)	9 wires around Stranding combination counter-rotating twisted
Banding	Fleece
wire arrangement	gray-pink, violet, red-blue, (brown, red, gray, black, yellow, pink, green, white, blue)
Cable weigth	45,1 g/m
Material jacket	PUR
Shore hardness jacket	92 ± 5 Shore A
Freedom from ingredients (jacket)	lead-free, cadmium-free, CFC-free, halogen-free, silicone-free
Outer-diameter (jacket)	6 mm
Tolerance outer diameter (sheath)	± 5 %
Material wire insulation	PP
Amount wires	12
Outer diameter insulation	1 mm
Outer diameter tolerance core insulation	± 5 %
Shore hardness wire insulation	72 ± 3 Shore D
Ingredient freeness wire insulation	lead-free, cadmium-free, CFC-free, halogen-free, silicone-free
Amount strands (wire)	18
Diameter of single wires	0,1 mm
Conductor crosssection (wire)	0,14 mm²
Material conductor wire	Stranded copper wire, bare
Conductor type (wire)	strand class 6
Nominal voltage AC max.	300 V
Current load capacity (standard)	to DIN VDE 0298-4
Current load capacity min. wire	2 A
Electrical resistance line constant wire	138 Ω/km @ 20 °C
AC withstand voltage (wire - wire)	1,5 kV @ 60 s
Power frequency withstand voltage (wire - jacket)	1,5 kV @ 60 s
Min. operating temperature (static)	-40 °C
Max. operating temperature (fixed)	85 °C
Operating temperature min. (dynamic)	-25 °C
Operating temperature max. (dynamic)	85 °C
UV resistance	DIN EN ISO 4892-2 A
Flame resistance	UL 1581 § 1100 FT2 | IEC 60332-2-2 | UL 1581 § 1090
chemical resistance	Good, application-related testing
Gasoline resistance	Good, application-related testing
Oil resistance	Good, application-related testing | DIN EN 60811-404
Bending radius (fixed)	7,5 x Outer diameter
Bending radius (dynamic)	10 x Outer diameter
No. of bending cycles (C-track)	2 Mio. @ 25 °C
Traversing distance (C-track)	5 m @ 25 °C
Travel speed (C-track)	3,3 m/s @ 25 °C
No. of torsion cycles	2 Mio.
Torsion stress	± 180 °/m
Torsion speed	35 cycles/min

The information in this Product-PDF has been compiled with the utmost care.
Liability for the correctness completeness and topicality of the information is restricted to gross negligence. Version: 2024-06-18