# 8-1393808-3 ! PENDING OBSOLESCENCE

Axicom | Axicom Cradle Relay N

TE Internal #: 8-1393808-3

TE Internal Description: V23154D 721B110

Signal Relays: 5 Amp, Monostable DC

View on TE.com >

Relays & Contactors > Relays > Signal Relays > Signal Relays: 5 Amp, Monostable DC



Contact Voltage Rating: **150 VDC**

Coil Power Rating DC: **647 mW**

Product Mount Type: **Socket**

Coil Voltage Rating: **24 VDC**

All Signal Relays: 5 Amp, Monostable DC (1)

## Features

### Configuration Features

| | |
|---|---|
| Contact Special Features | Single Contact |
| Contact Arrangement | 1 Form C (CO) |
| Contact Number of Poles | 4 |

### Electrical Characteristics

| | |
|---|---|
| Insulation Initial Dielectric Between Open Contacts | 500 Vrms |
| Contact Limiting Making Current | 2 A |
| Contact Limiting Short-Time Current | 2 A |
| Contact Limiting Continuous Current | 2 A |
| Insulation Initial Dielectric Between Adjacent Contacts | 500 Vrms |
| Insulation Initial Dielectric Between Contacts & Coil | 1000 Vrms |
| Insulation Initial Resistance | 1000 MΩ |
| Power Consumption | 800 mW |
| Input Voltage | 125 VAC |
| Contact Limiting Breaking Current | 2 A |
| Coil Resistance | 890 Ω |
| Contact Voltage Rating | 150 VDC |
| Coil Power Rating DC | 647 mW |
| Coil Voltage Rating | 24 VDC |

| | |
|---|---|
| Contact Current Rating | 1.25 A |
| Contact Switching Voltage (Max) | 150 VDC |

## Body Features

| | |
|---|---|
| Product Weight | 25 g[.883 oz] |

## Contact Features

| | |
|---|---|
| Contact Plating Material | Gold |
| Contact Material | Nickel-Palladium |

## Termination Features

| | |
|---|---|
| Relay Connection Type | Plug-In |

## Mechanical Attachment

| | |
|---|---|
| Product Mounting Feature Type | Mounting Studs |
| Product Mount Type | Socket |

## Dimensions

| | |
|---|---|
| Product Width | 19 mm[.748 in] |
| Product Length | 30 mm[1.18 in] |
| Product Height | 30 mm[1.18 in] |

## Usage Conditions

| | |
|---|---|
| Environmental Ambient Temperature (Max) | 70 °C[158 °F] |
| Operating Temperature Range | -40 - 70 °C |

## Operation/Application

| | |
|---|---|
| Actuating System | AC, DC |
| Performance Type | Standard |
| Coil Magnetic System | Monostable |

## Packaging Features

| | |
|---|---|
| Packaging Method | Box & Carton |

## Other

| | |
|---|---|
| Length Class (Mechanical) | 25 - 30 mm |
| Environmental Ambient Temperature Class | 50 - 70 °C |
| Height Class (Mechanical) | 25 - 30 mm |
| Coil Power Rating Class | 600 - 800 mW |
| Width Class (Mechanical) | 16 - 20 mm |

| | |
|---|---|
| Contact Current Class | 0 - 2 A |

## Product Compliance

For compliance documentation, visit the product page on TE.com>

| | |
|---|---|
| EU RoHS Directive 2011/65/EU | Compliant |
| EU ELV Directive 2000/53/EC | Compliant |
| China RoHS 2 Directive MIIT Order No 32, 2016 | No Restricted Materials Above Threshold |
| EU REACH Regulation (EC) No. 1907/2006 | Current ECHA Candidate List: JAN 2024 (240)<br>Candidate List Declared Against: JAN 2023 (233)<br>Does not contain REACH SVHC |
| Halogen Content | Low Halogen - Br, Cl, F, I < 900 ppm per homogenous material. Also BFR/CFR/PVC Free |
| Solder Process Capability | Wave solder capable to 265°C |

Product Compliance Disclaimer

This information is provided based on reasonable inquiry of our suppliers and represents our current actual knowledge based on the information they provided. This information is subject to change. The part numbers that TE has identified as EU RoHS compliant have a maximum concentration of 0.1% by weight in homogenous materials for lead, hexavalent chromium, mercury, PBB, PBDE, DBP, BBP, DEHP, DIBP, and 0.01% for cadmium, or qualify for an exemption to these limits as defined in the Annexes of Directive 2011/65/EU (RoHS2). Finished electrical and electronic equipment products will be CE marked as required by Directive 2011/65/EU. Components may not be CE marked. Additionally, the part numbers that TE has identified as EU ELV compliant have a maximum concentration of 0.1% by weight in homogenous materials for lead, hexavalent chromium, and mercury, and 0.01% for cadmium, or qualify for an exemption to these limits as defined in the Annexes of Directive 2000/53/EC (ELV). Regarding the REACH Regulation, the information TE provides on SVHC in articles for this part number is based on the latest European Chemicals Agency (ECHA) 'Guidance on requirements for substances in articles' posted at this URL: https://echa.europa.eu/guidance-documents/guidance-on-reach

## Compatible Parts



TE Part # CAT-AX41-C8422
Cradle Relay Accessory

## Also in the Series | Axicom Cradle Relay N

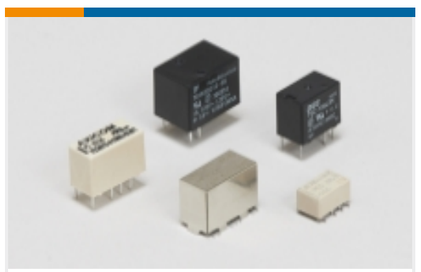

Signal Relays(1)

## Customers Also Bought



TE Part # 5-1393243-9
RT424005



TE Part # 3-826947-6
36P MOD2 STIFT LEI



TE Part # 1393845-6
RP821048



TE Part # DRC16-70SB
PLG, 70P, BLK, N, B




TE Part # 5053142077
RNF-100-3/8-0-STK



TE Part # 2141022-1
RELAY BOX ASSY,HARD WIRED




TE Part # 2063438-1
SDE UMNL 1.5-2.5mm2 ASSY

TE Part # AAB1892-00
91H1-15-10-1-B-HE200



TE Part # AAB2308-00
91H1-21-12-1-B-HE300

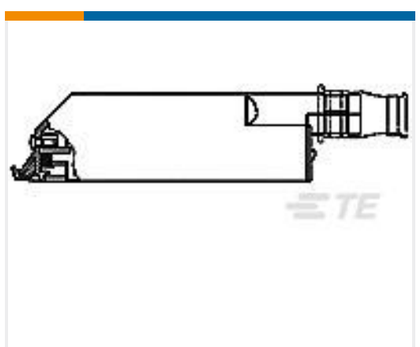

TE Part # 828761-1
55P JUN-TIM GEH MIX

## Documents

### CAD Files

3D PDF

3D

Customer View Model

ENG_CVM_CVM_8-1393808-3_A.2d_dxf.zip

English

Customer View Model

ENG_CVM_CVM_8-1393808-3_A.3d_igs.zip

English

## Customer View Model

ENG_CVM_CVM_8-1393808-3_A.3d_stp.zip

English

By downloading the CAD file I accept and agree to the Terms and Conditionsof use.

## Product Specifications

### Product Specification

English

### Definitions General Purpose Relays

English