MURR ELEKTRONIK
stay connected

MSUD valve plug A-18mm with cable

PVC 3x0.75 gy 3m

MSUD
Form A (18 mm)
110 V AC/DC ±10%
LED and suppression
Further cable lengths on request.
Plastic housings with good resistance against chemicals and oils.
The resistance to aggressive media should be individually tested for your application. Further details on request.

Link to Product

Illustration



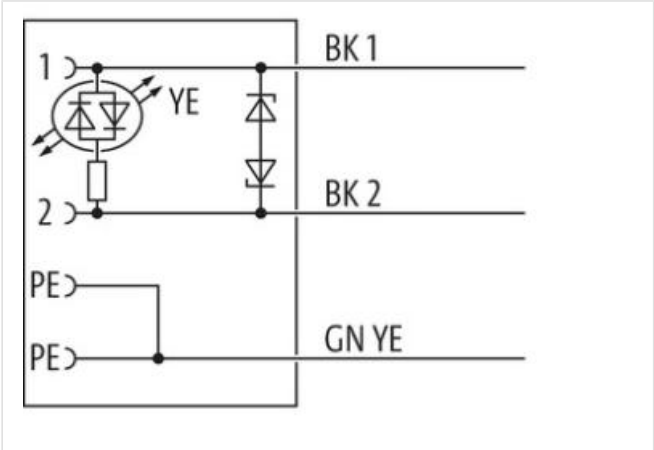

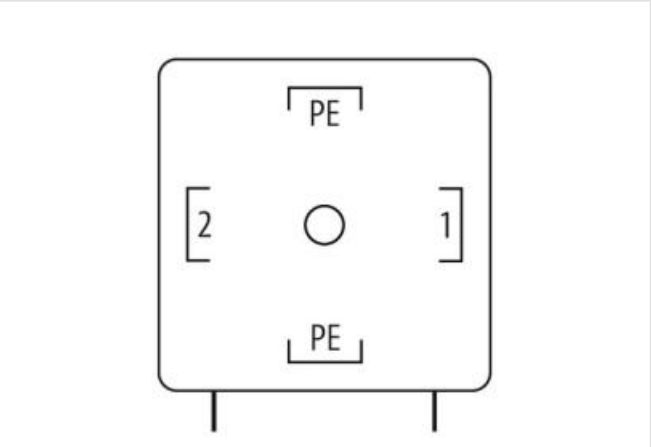

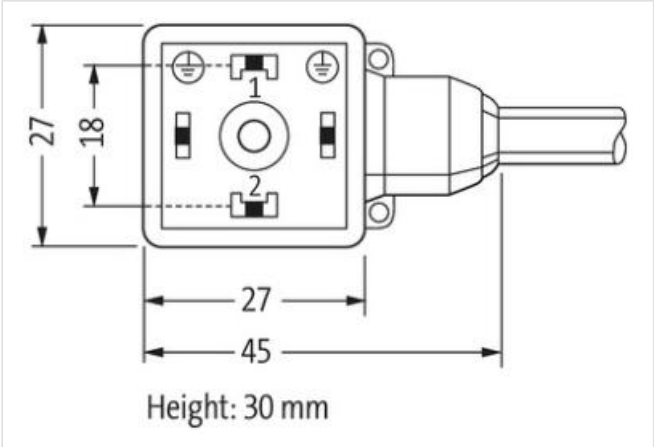

Product may differ from Image

Cable length	3 m

Side 1

Tightening torque	0,4 Nm

The information in this Product-PDF has been compiled with the utmost care.
Liability for the correctness completeness and topicality of the information is restricted to gross negligence. Version: 2024-06-18

MURR ELEKTRONIK
stay connected

Mounting method	inserted, screwed
Family construction form	MSUD A
Thread	M3
Material	PBT
Degree of protection (EN IEC 60529)	IP67
Commercial data	
ECLASS-6.0	27279218
ECLASS-7.0	27279218
ECLASS-8.0	27279218
ECLASS-9.0	27060311
ECLASS-10.1	27060312
ECLASS-11.1	27060312
ECLASS-12.0	27060312
ETIM-5.0	EC001855
customs tariff number	85444290
GTIN	4048879193207
Packaging unit	1
Electrical data	
Drop-out delay time max.	20 ms
Electrical data | Supply	
Operating voltage AC	110 V
Operating voltage AC min.	99 V
Operating voltage AC max.	121 V
Operating voltage DC	110 V
Operating voltage DC min.	99 V
Operating voltage DC max.	121 V
Cut-off peak voltage max.	250 V
Current operating per contact max.	4 A
Installation | Connection	
Mounting set	M3
Device protection | Electrical	
Additional condition protection degree	inserted, screwed
Pollution Degree	3
Mechanical data | Material data	
Coating of fitting	verzinkt
Color housing	black
Material housing	Plastic
Material screw connection	Steel
Mechanical data | Mounting data	
Mounting method	inserted, screwed
Environmental characteristics | Climatic	
Operating temperature min.	-25 °C
Operating temperature max.	85 °C
Additional condition temperature range	depending on cable quality
Important installation notes	
Note on strain relief	Protect the connectors by suitable measures from mechanical loads, e.g. by the usage of cable ties.
Note on bending radius	**Attention:** Observe the permissible bending radii when laying cables, as the IP protection class can be endangered by excessive bending forces.
Installation | Cable	
wire arrangement	black 1, black 2, green-yellow
Cable identification	216

The information in this Product-PDF has been compiled with the utmost care.
Liability for the correctness completeness and topicality of the information is restricted to gross negligence. Version: 2024-06-18

MURR ELEKTRONIK
stay connected

Cable Type	1
Printing color of wire insulation	white (isolation black)
Jacket Color	gray
Amount stranding	1
Stranding	3 wires twisted
wire arrangement	black 1, black 2, green-yellow
Cable weigth	63,8 g/m
Material jacket	PVC
Shore hardness jacket	80 ± 5 Shore A
Freedom from ingredients (jacket)	lead-free, cadmium-free, CFC-free, silicone-free
Outer-diameter (jacket)	5,9 mm
Tolerance outer diameter (sheath)	± 5 %
Material wire insulation	PVC
Amount wires	3
Outer diameter insulation	1,8 mm
Outer diameter tolerance core insulation	± 5 %
Shore hardness wire insulation	43 ± 5 Shore D
Material properties wire insulation	good machinability
Ingredient freeness wire insulation	lead-free, cadmium-free, CFC-free, silicone-free
Printing color of wire insulation	white (isolation black)
Amount strands (wire)	24
Diameter of single wires	0,2 mm
Conductor crosssection (wire)	0,75 mm²
Material conductor wire	Stranded copper wire, bare
Conductor type (wire)	Strand class 5
Max. rated voltage (conductor - conductor)	500 V
Max. rated voltage (conductor - ground)	300 V
Current load capacity (standard)	to DIN VDE 0298-4
Current load capacity min. wire	12 A
Electrical resistance line constant wire	26 Ω/km @ 20 °C
AC withstand voltage (wire - wire)	3 kV @ 60 s
Power frequency withstand voltage (wire - jacket)	3 kV @ 60 s
Min. operating temperature (static)	-30 °C
Max. operating temperature (fixed)	70 °C
Operating temperature min. (dynamic)	-5 °C
Operating temperature max. (dynamic)	70 °C
Flame resistance	UL 1581 § 1090 | IEC 60332-2-2 | UL 1581 § 1100 FT2
chemical resistance	Good, application-related testing
Gasoline resistance	Good, application-related testing
Oil resistance	Good, application-related testing | DIN EN 60811-404
Bending radius (fixed)	5 x Outer diameter
Bending radius (dynamic)	10 x Outer diameter

The information in this Product-PDF has been compiled with the utmost care.
Liability for the correctness completeness and topicality of the information is restricted to gross negligence. Version: 2024-06-18