MURR ELEKTRONIK
stay connected

Modlight Illumix Classic Line 18W

LED machine lamp, IP67, 24VDC, M12 connection

Modlight Illumix Classic Line
18 W

[Link to Product]

Illustration





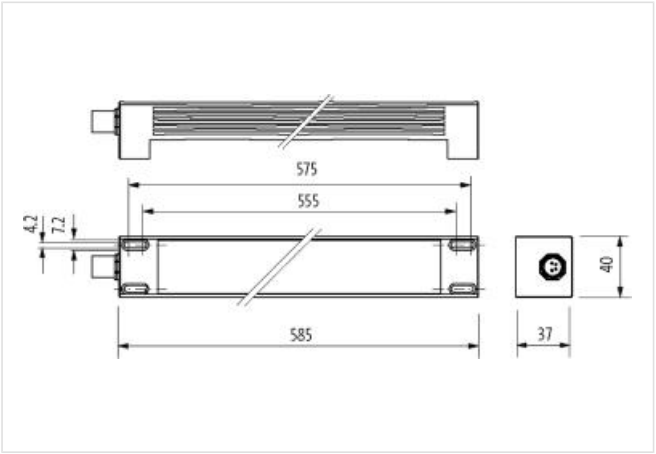

Product may differ from Image

Commercial data

ECLASS-6.0	27110306
ECLASS-6.1	27110390
ECLASS-7.0	27110390
ECLASS-8.0	27110390
ECLASS-9.0	27110345
ECLASS-10.1	27110345
ECLASS-11.1	27110345
ECLASS-12.0	27110345

The information in this Product-PDF has been compiled with the utmost care.
Liability for the correctness completeness and topicality of the information is restricted to gross negligence. Version: 2024-06-18

MURR ELEKTRONIK
stay connected

ETIM-5.0	EC000348
customs tariff number	94054239
GTIN	4048879670821
Packaging unit	1
Electrical data | Supply	
Operating voltage DC	24 V
Operating voltage DC min.	21,6 V
Operating voltage DC max.	27,6 V
Power consumption max.	18 W
HMI | Illumination properties	
Radiation angle min.	120 °
Luminous efficacy	105 lm/W
Light color	daylight white
Luminous temperature	5500 K
Color reproduction (Ra) min.	80
Luminous flux	1890 lm
Installation | Connection	
Family construction form	M12
Gender	male
Installation | Pin assignment	
Coding	A
No. of poles	4
Device protection | Electrical	
Installation height max. ASL	2000 m
Degree of protection (EN IEC 60529)	IP67
Device protection | Mechanical	
Shock resistance (EN IEC 60068-2-27)	50 g, 11 ms
Vibration resistance (EN IEC 60068-2-6)	10 mm (2 ... 9 Hz), 3 g (9 ... 200 Hz)
Mechanical data | Material data	
Coating housing	eloxiert
Material housing	Aluminium
Material light cover	diffuse single-pane safety glass (ESG)
Thickness material light cover	4 mm
Mechanical data | Mounting data	
Height	37 mm
Width	585 mm
Depth	40 mm
Screw head diameter max.	12 mm
Screw head thread max.	M5
Environmental characteristics | Climatic	
Operating temperature min.	-30 °C
Operating temperature max.	50 °C
Relative humidity min. (operation)	5 %
Relative humidity max. (operation)	95 %
Connection type 1	
Family construction form	M8
Gender	male
Coding	A
No. of poles	4
PIN 1	n.c.

The information in this Product-PDF has been compiled with the utmost care.
Liability for the correctness completeness and topicality of the information is restricted to gross negligence. Version: 2024-06-18

PIN 2	n.c.
PIN 3	0 V DC
PIN 4	24 V DC

The information in this Product-PDF has been compiled with the utmost care.
Liability for the correctness completeness and topicality of the information is restricted to gross negligence. Version: 2024-06-18