OWR-1340T-38A

Pistonic driver for earphones and earbuds

Receiver targeted for Active Noise Control applications due to its extremely large bandtwidth and linearity. Both key parameters achieved by a new "pistonic" diaphragm design.



Characteristics

Size (ØxH) [mm]	13.0x4.0	
Sensitivity [dBSPL]	84.0±3dB	[1mW, 1.0 KHz, 1.0 cm, f.f.]
Impedance [Ω]	38	
Power [W]	2.0 / 5.0	Free field
F0 [Hz]	200	Free field
Termination	Terminals	

Specifications are subject to change without prior notice. Upon request Ole Wolff can supply further specifications, simulation parameters etc.

Mechanical drawing

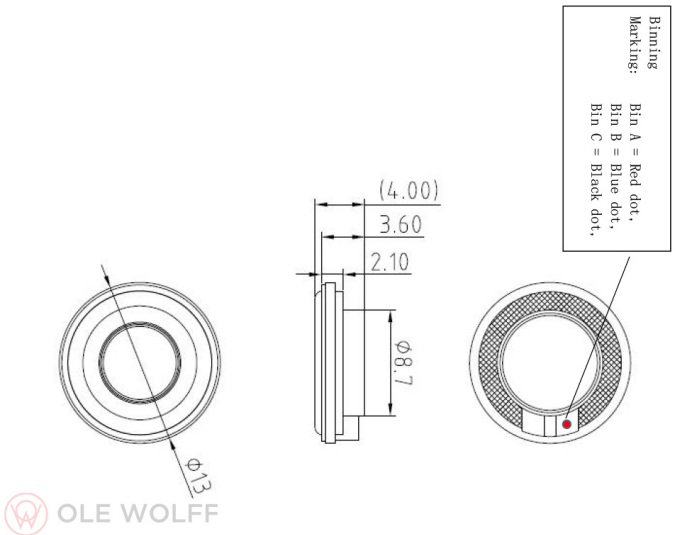

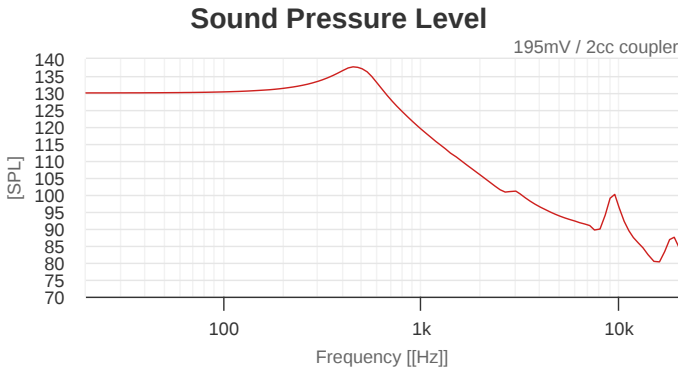

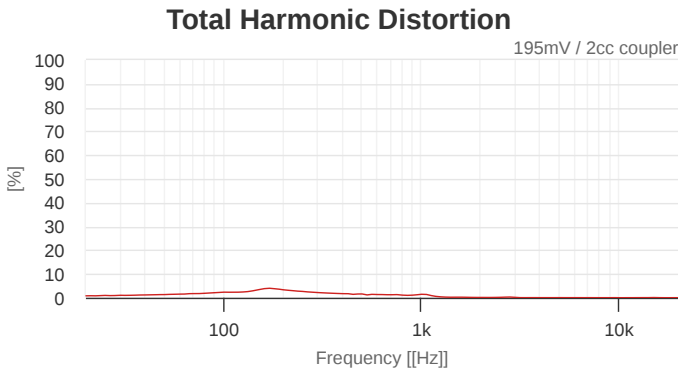

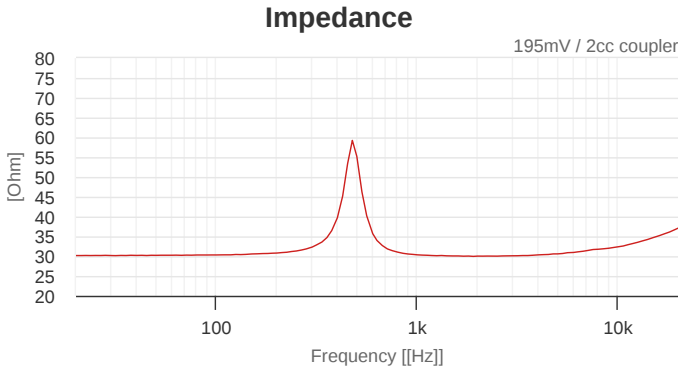

Ole Wolff Elektronik A/S, Roedengvej 14, 4180 Soroe, DK Denmark
T: +45 5783 3830 | sales@owolff.com

Read more about Pistonic series drivers

Ole Wolff Elektronik A/S, Roedengvej 14, 4180 Soroe, DK Denmark
T: +45 5783 3830 | sales@owolff.com