May.1.2024 Copyright 2024 HIROSE ELECTRIC CO., LTD. All Rights Reserved.
In case of consideration for using Automotive equipment / device which demand high reliability, kindly contact our sales window correspondents.

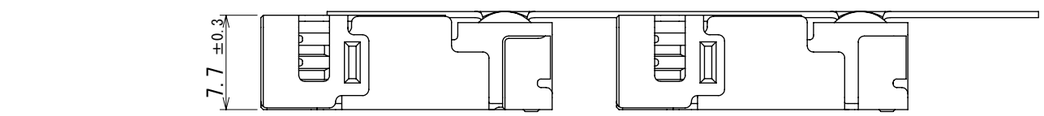

2 Style and Dimension of Reel

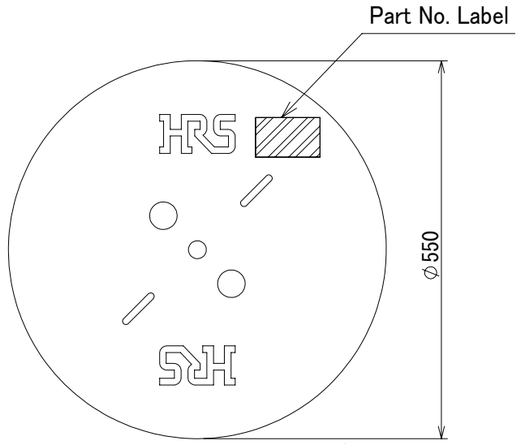

Detail of part No. Label

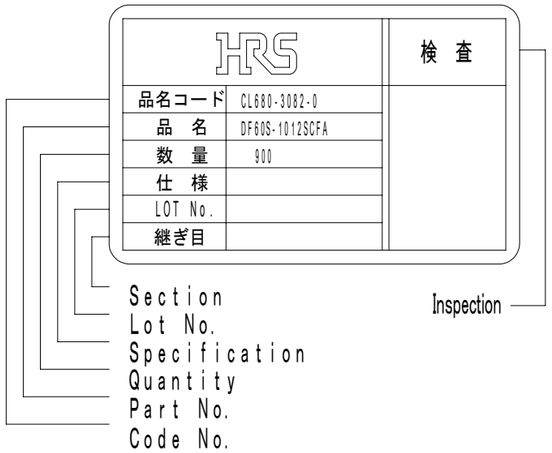

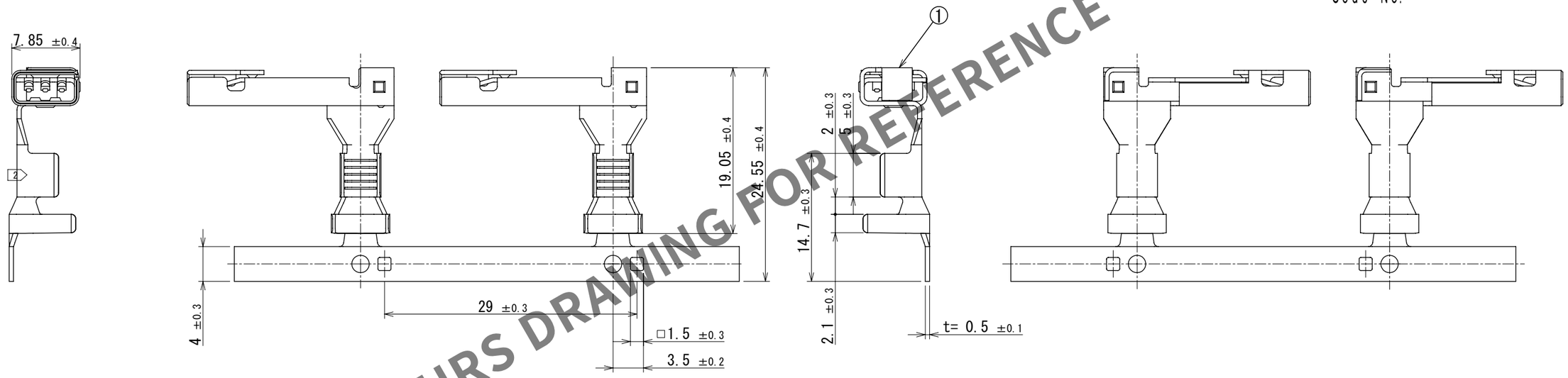

HRS DRAWING FOR REFERENCE

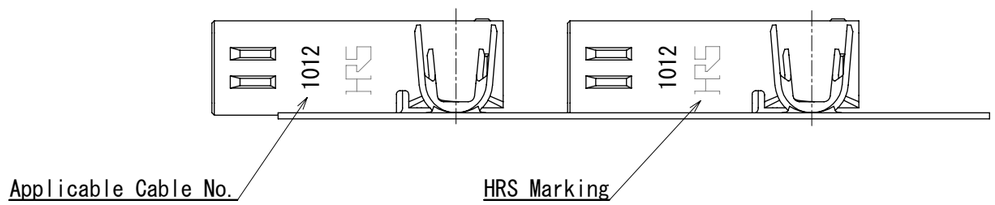

2 Note 1. 1RL:800 Contacts.
2 Style of reelshows in figure.
3. Please make sure to check ths form of crimping using a cable in adusting an applicator.
4. Applicable cable is 10-12 AWG.
5. Refer to the technical specification (ETAP-H0824-00) for the packing type.
6. Please refer to the technical specification (ETAD-H0654-00, ETAD-H0653-00, ETAD-H1042-00) for handling.

NO.	MATERIAL	FINISH , REMARKS
1	Copper alloy	Contact area : Au plating 0.2μm min Wire barrel area : Sn plating 1 μm min Under plating : Ni plating 1 μm min

UNITS	SCALE		COUNT	DESCRIPTION OF REVISIONS	DESIGNED	CHECKED	DATE
mm	2:1	2	1	DIS-H-00019416	KT.NUMATA	TT.OHSAKO	2023.11.01

HRS HIROSE ELECTRIC CO.,LTD.

APPROVED	: SJ.OKAMURA	2023.10.19	DRAWING NO.	EDC-402623-00-00
CHECKED	: TT.OHSAKO	2023.10.19	PART NO.	DF60S-1012SCFA
DESIGNED	: KT.NUMATA	2023.10.18	CODE NO.	CL0680-3082-0-00
DRAWN	: SK.CHIBA	2023.10.18		2 1/1