MURR ELEKTRONIK
stay connected

Mini (7/8) 4 pole, Female 90° w/ Cable

TPE 4x16AWG ye UL/CSA, TC-ER

Female 90°
7/8"
4-pole
Power cable
USA
without cable sleeves
Further cable lengths on request.
Plastic housings with good resistance against chemicals and oils.
The resistance to aggressive media should be individually tested for your application. Further details on request.

Link to Product

Illustration

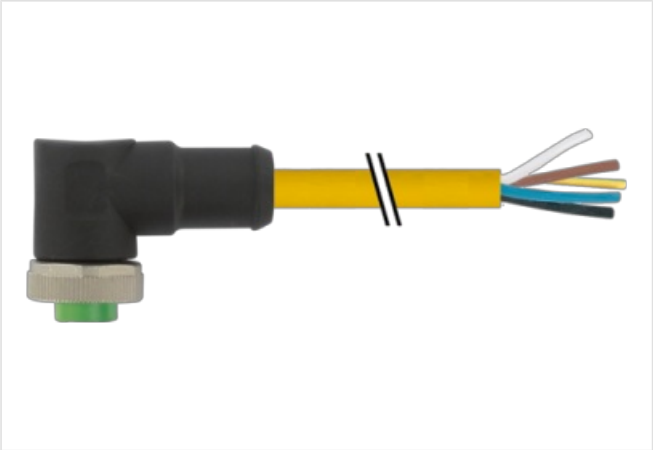

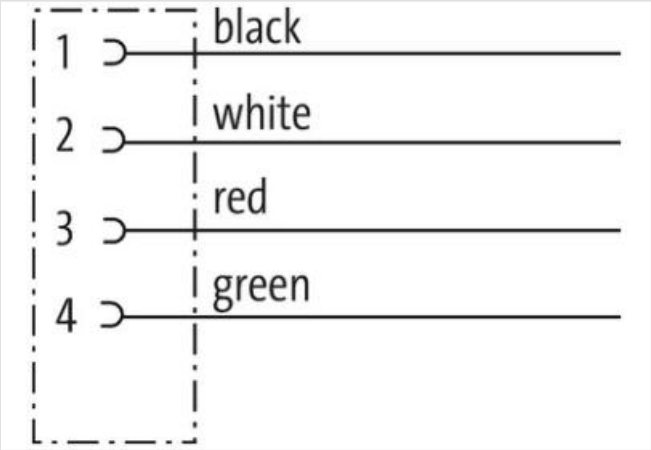

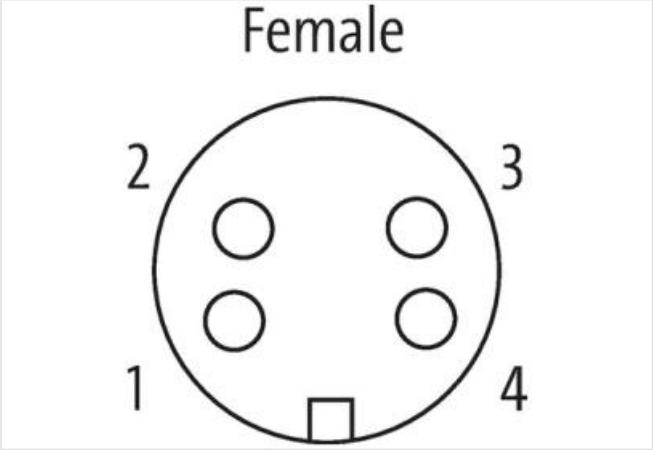

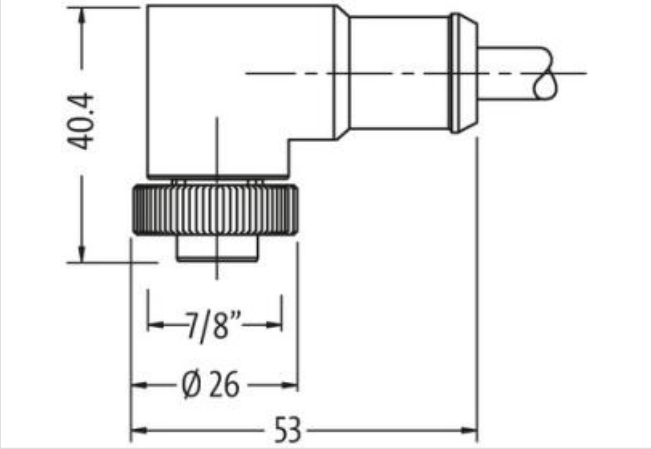

Product may differ from Image

Cable length	5 m

The information in this Product-PDF has been compiled with the utmost care.
Liability for the correctness completeness and topicality of the information is restricted to gross negligence. Version: 2024-06-18

MURR ELEKTRONIK
stay connected

Side 1	
Tightening torque	1,5 Nm
Mounting method	inserted, screwed
Family construction form	7/8"
Thread	7/8"
suitable for corrugated tube (internal Ø)	17,8 mm
No. of poles	4
Width across flats	SW24
Commercial data	
ECLASS-6.0	27279218
ECLASS-7.0	27279218
ECLASS-8.0	27279218
ECLASS-9.0	27060311
ECLASS-10.1	27060311
ECLASS-11.1	27060311
ECLASS-12.0	27060327
ETIM-5.0	EC001855
customs tariff number	85444290
GTIN	4048879698269
Packaging unit	1
Electrical data | Supply	
Operating voltage AC max.	600 V
Operating voltage DC max.	600 V
Current operating per contact max.	9 A
Diagnostics	
Status indication LED	no
Device protection | Electrical	
Degree of protection (EN IEC 60529)	IP68
Additional condition protection degree	inserted, screwed
Pollution Degree	3
Rated surge voltage	2,5 kV
Mechanical data | Material data	
Coating locking	Nickeled
Material housing	PUR
Locking material	Zinc die-casting
Mechanical data | Mounting data	
Mounting method	inserted, screwed, Shaking protection
Environmental characteristics | Climatic	
Operating temperature min.	-25 °C
Operating temperature max.	80 °C
Additional condition temperature range	depending on cable quality
Important installation notes	
Note on strain relief	Protect the connectors by suitable measures from mechanical loads, e.g. by the usage of cable ties.
Note on bending radius	**Attention:** Observe the permissible bending radii when laying cables, as the IP protection class can be endangered by excessive bending forces.
Installation | Cable	
wire arrangement	black, green, red, white
Cable identification	U1C
Jacket Color	yellow
Type of Certificate	cURus
Amount stranding	1

The information in this Product-PDF has been compiled with the utmost care.
Liability for the correctness completeness and topicality of the information is restricted to gross negligence. Version: 2024-06-18

MURR ELEKTRONIK
stay connected

Stranding	4 wires with 5 Filler twisted
Banding	Foil
Filler	yes
wire arrangement	black, green, red, white
Cable weigth	117,7 g/m
Material jacket	TPE
Freedom from ingredients (jacket)	lead-free, CFC-free, halogen-free
Outer-diameter (jacket)	9,02 mm
Tolerance outer diameter (sheath)	± 5 %
Material wire insulation	PVC
Amount wires	4
Outer diameter insulation	2,62 mm
Outer diameter tolerance core insulation	± 5 %
Ingredient freeness wire insulation	lead-free, CFC-free
Amount strands (wire)	65
Diameter of single wires	34 AWG
Conductor crosssection (wire)	16 AWG
Material conductor wire	Stranded copper wire, bare
Nominal voltage AC max.	600 V
Current load capacity (standard)	according to NFPA-70 (NEC) : 400.5(A) (1-3)
Current load capacity min. wire	8 A
Electrical resistance line constant wire	13,2 Ω/km @ 20 °C
AC withstand voltage (wire - wire)	6 kV @ 60 s
Power frequency withstand voltage (wire - jacket)	6 kV @ 60 s
Min. operating temperature (static)	-50 °C
Max. operating temperature (fixed)	105 °C
Operating temperature min. (dynamic)	-20 °C
Operating temperature max. (dynamic)	90 °C
Flame resistance	UL 1581 § 1090 | IEC 60332-2-2 | UL 1581 § 1100 FT2
chemical resistance	Good, application-related testing
Gasoline resistance	Good, application-related testing
Oil resistance	Good, application-related testing | DIN EN 60811-404
Bending radius (fixed)	8 x Outer diameter
Bending radius (dynamic)	10 x Outer diameter
No. of bending cycles (C-track)	2 Mio.

The information in this Product-PDF has been compiled with the utmost care.
Liability for the correctness completeness and topicality of the information is restricted to gross negligence. Version: 2024-06-18