MURR ELEKTRONIK
stay connected

**MSUD valve plug BI-11mm with cable**

PVC 3x0.75 gy 5m

MSUD
Form BI (11 mm)
0...230 V AC/DC
without components
PE at cable entry (0°)
Further cable lengths on request.
Plastic housings with good resistance against chemicals and oils.
The resistance to aggressive media should be individually tested for your application. Further details on request.

## Link to Product

**Illustration**






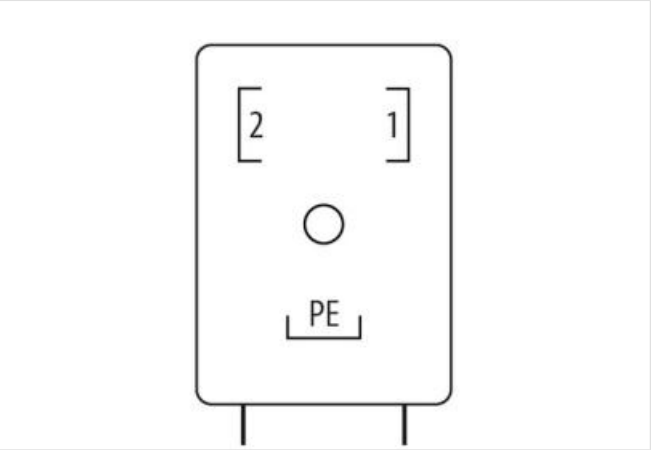


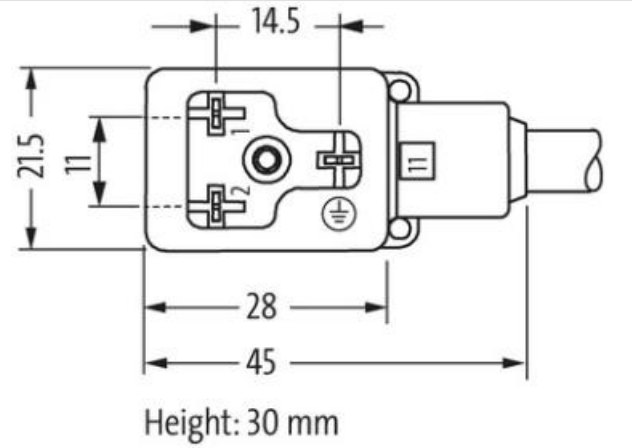


Product may differ from Image

| | |
|---|---|
| Cable length | 5 m |

**Side 1**

The information in this Product-PDF has been compiled with the utmost care.
Liability for the correctness completeness and topicality of the information is restricted to gross negligence. Version: 2024-06-18

MURR ELEKTRONIK
stay connected

| | |
|---|---|
| Tightening torque | 0,4 Nm |
| Mounting method | inserted, screwed |
| Family construction form | MSUD BI |
| Thread | M3 |
| Material | PBT |
| Degree of protection (EN IEC 60529) | IP67 |
| **Commercial data** | |
| ECLASS-6.0 | 27279218 |
| ECLASS-7.0 | 27279218 |
| ECLASS-8.0 | 27279218 |
| ECLASS-9.0 | 27060311 |
| ECLASS-10.1 | 27060312 |
| ECLASS-11.1 | 27060312 |
| ECLASS-12.0 | 27060312 |
| ETIM-5.0 | EC001855 |
| customs tariff number | 85444290 |
| GTIN | 4048879220811 |
| Packaging unit | 1 |
| **Electrical data \| Supply** | |
| Operating voltage AC max. | 250 V |
| Operating voltage DC max. | 250 V |
| Current operating per contact max. | 10 A |
| **Installation \| Connection** | |
| Mounting set | M3 |
| **Device protection \| Electrical** | |
| Additional condition protection degree | inserted, screwed |
| Pollution Degree | 3 |
| Rated surge voltage | 4 kV |
| **Mechanical data \| Material data** | |
| Coating of fitting | verzinkt |
| Color housing | black |
| Material housing | Plastic |
| Material screw connection | Steel |
| **Mechanical data \| Mounting data** | |
| Mounting method | inserted, screwed |
| **Environmental characteristics \| Climatic** | |
| Operating temperature min. | -25 °C |
| Operating temperature max. | 85 °C |
| Additional condition temperature range | depending on cable quality |
| **Important installation notes** | |
| Note on strain relief | Protect the connectors by suitable measures from mechanical loads, e.g. by the usage of cable ties. |
| Note on bending radius | **Attention:** Observe the permissible bending radii when laying cables, as the IP protection class can be endangered by excessive bending forces. |
| **Installation \| Cable** | |
| wire arrangement | black 1, black 2, green-yellow |
| Cable identification | 216 |
| Cable Type | 1 |
| Printing color of wire insulation | white (isolation black) |
| Jacket Color | gray |
| Amount stranding | 1 |
| Stranding | 3 wires twisted |

The information in this Product-PDF has been compiled with the utmost care.
Liability for the correctness completeness and topicality of the information is restricted to gross negligence. Version: 2024-06-18

MURR ELEKTRONIK
stay connected

| | |
|---|---|
| wire arrangement | black 1, black 2, green-yellow |
| Cable weigth | 63,8 g/m |
| Material jacket | PVC |
| Shore hardness jacket | 80 ± 5 Shore A |
| Freedom from ingredients (jacket) | lead-free, cadmium-free, CFC-free, silicone-free |
| Outer-diameter (jacket) | 5,9 mm |
| Tolerance outer diameter (sheath) | ± 5 % |
| Material wire insulation | PVC |
| Amount wires | 3 |
| Outer diameter insulation | 1,8 mm |
| Outer diameter tolerance core insulation | ± 5 % |
| Shore hardness wire insulation | 43 ± 5 Shore D |
| Material properties wire insulation | good machinability |
| Ingredient freeness wire insulation | lead-free, cadmium-free, CFC-free, silicone-free |
| Printing color of wire insulation | white (isolation black) |
| Amount strands (wire) | 24 |
| Diameter of single wires | 0,2 mm |
| Conductor crosssection (wire) | 0,75 mm² |
| Material conductor wire | Stranded copper wire, bare |
| Conductor type (wire) | Strand class 5 |
| Max. rated voltage (conductor - conductor) | 500 V |
| Max. rated voltage (conductor - ground) | 300 V |
| Current load capacity (standard) | to DIN VDE 0298-4 |
| Current load capacity min. wire | 12 A |
| Electrical resistance line constant wire | 26 Ω/km @ 20 °C |
| AC withstand voltage (wire - wire) | 3 kV @ 60 s |
| Power frequency withstand voltage (wire - jacket) | 3 kV @ 60 s |
| Min. operating temperature (static) | -30 °C |
| Max. operating temperature (fixed) | 70 °C |
| Operating temperature min. (dynamic) | -5 °C |
| Operating temperature max. (dynamic) | 70 °C |
| Flame resistance | UL 1581 § 1090 \| IEC 60332-2-2 \| UL 1581 § 1100 FT2 |
| chemical resistance | Good, application-related testing |
| Gasoline resistance | Good, application-related testing |
| Oil resistance | Good, application-related testing \| DIN EN 60811-404 |
| Bending radius (fixed) | 5 x Outer diameter |
| Bending radius (dynamic) | 10 x Outer diameter |

The information in this Product-PDF has been compiled with the utmost care.
Liability for the correctness completeness and topicality of the information is restricted to gross negligence. Version: 2024-06-18