MURR ELEKTRONIK
stay connected

MICO BASIC 4.6 electronic circuit protection, 4 CHANNELS

IN: 24 V DC OUT: 24 V DC / 6 A

MICO BASIC 4.6
4 channels
Current adjustment 6 A

Link to Product

Illustration



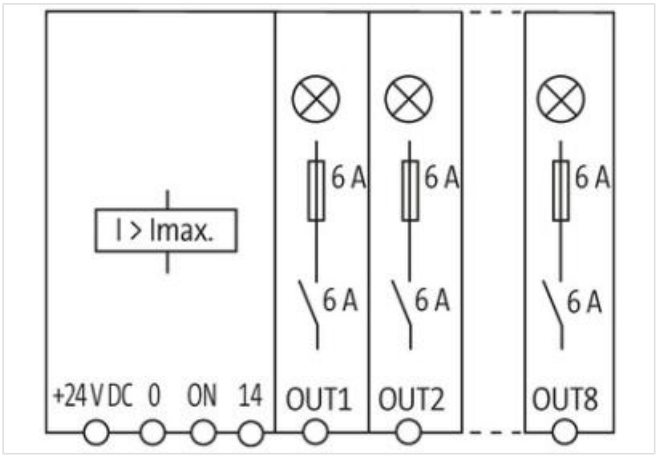

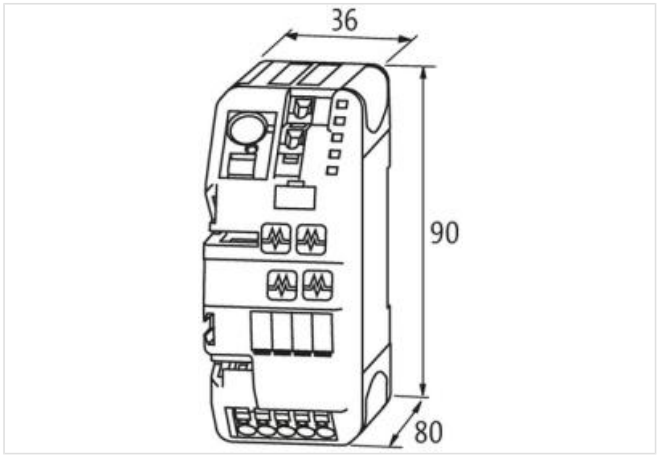

Product may differ from Image

Commercial data

ECLASS-6.0	27371802
ECLASS-6.1	27371802
ECLASS-7.0	27371802
ECLASS-8.0	27371802
ECLASS-9.0	27371802
ECLASS-10.1	27371802

The information in this Product-PDF has been compiled with the utmost care.
Liability for the correctness completeness and topicality of the information is restricted to gross negligence. Version: 2024-06-18

MURR ELEKTRONIK
stay connected

ECLASS-11.1	27371802
ECLASS-12.0	27371802
ETIM-5.0	EC001440
customs tariff number	85363010
GTIN	4048879332422
Packaging unit	1
Electrical data | Input	
Input voltage DC	24 V
Input voltage DC min.	18 V
Input voltage DC max.	30 V
ON input voltage control inputs min.	10 V
ON input voltage control inputs max.	30 V
ON pulse length control inputs high min.	20 ms
Total current bridge set max.	40 A
Electrical data | Output	
Switch-on capacity per channel max.	20 mF
Switching current max.	20 mA
Installation	
Connection cross-section inputs max.	16 mm²
Connection cross-section outputs max.	4 mm²
Connection cross-section control inputs / control outputs max.	2,5 mm²
Mechanical data | Mounting data	
Mounting method	geschnappt
Suitable for mounting type	Mounting rail TH35, (EN 60715)
Height	90 mm
Width	36 mm
Depth	80 mm
Environmental characteristics | Climatic	
Operating temperature min.	0 °C
Operating temperature max.	55 °C
Storage temperature min.	-40 °C
Storage temperature max.	80 °C
Connection type 5	
Family construction form	Bridging Contact
Gender	female
Color contact carrier	black
No. of poles	1
PIN 1	24 V DC
Family construction form	Bridging Contact
Gender	female
Color contact carrier	black
No. of poles	1
PIN 1	0 V
Connection	Spring clamp terminals FK
Family construction form	terminal
Gender	female
Color contact carrier	green
No. of poles	1
PIN 1	24 V DC
Connection	Spring clamp terminals FK
Family construction form	terminal

The information in this Product-PDF has been compiled with the utmost care.
Liability for the correctness completeness and topicality of the information is restricted to gross negligence. Version: 2024-06-18

Gender	female
Color contact carrier	green
No. of poles	2
PIN 1	On
PIN 2	14
Connection	Spring clamp terminals FK
Family construction form	terminal
Gender	female
Color contact carrier	green
No. of poles	5
PIN 1	0 V
PIN 2	Out 1
PIN 3	Out 2
PIN 4	Out 3
PIN 5	Out 4

The information in this Product-PDF has been compiled with the utmost care.
Liability for the correctness completeness and topicality of the information is restricted to gross negligence. Version: 2024-06-18