MURR ELEKTRONIK
stay connected

RJ45 male 0° / RJ45 male 0° shielded

FRNC/LS0H 4x2xAWG27 shielded gr UL 10m

Ethernet CAT6A
Male straight – male straight
RJ45 – RJ45, 8-pole
shielded
without cable sleeves
Further cable lengths on request.
Plastic housings with good resistance against chemicals and oils.
The resistance to aggressive media should be individually tested for your application. Further details on request.

Link to Product

Illustration

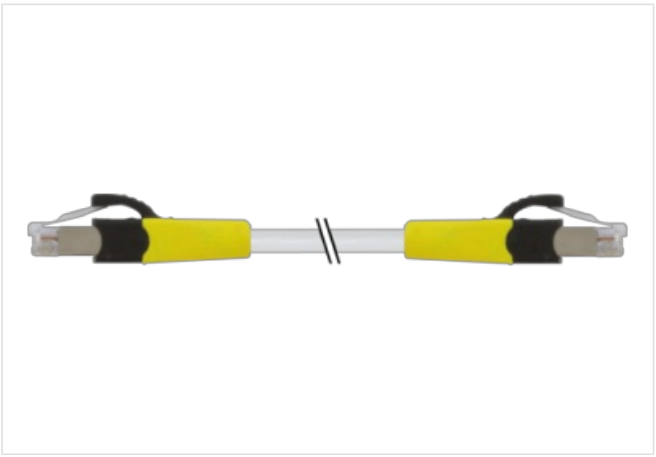

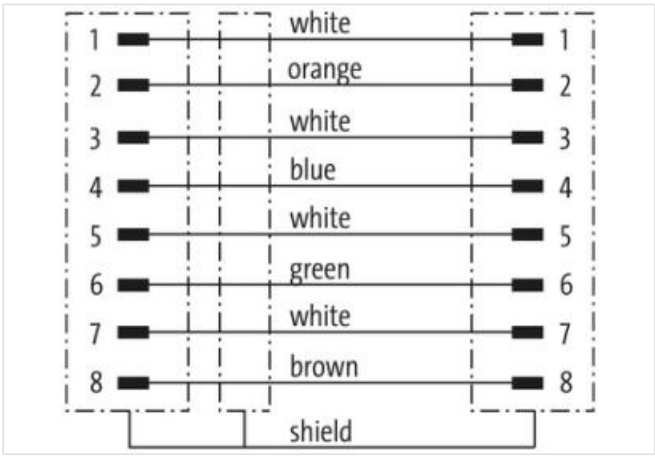

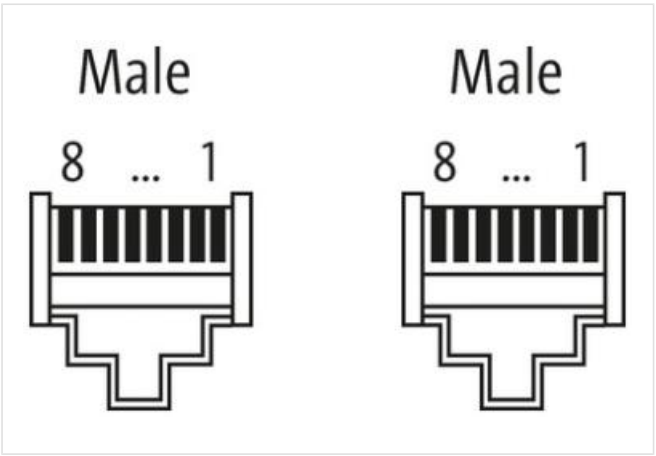

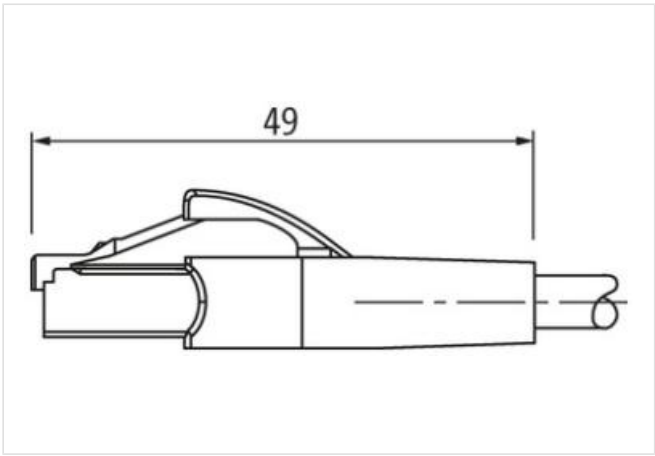

Product may differ from Image

Cable length	10 m

Side 1

The information in this Product-PDF has been compiled with the utmost care.
Liability for the correctness completeness and topicality of the information is restricted to gross negligence. Version: 2024-06-18

MURR ELEKTRONIK
stay connected

Mounting method	inserted
Family construction form	RJ45
Side 2	
Mounting method	inserted
Commercial data	
ECLASS-6.0	27061801
ECLASS-6.1	27060307
ECLASS-7.0	27060307
ECLASS-8.0	27060307
ECLASS-9.0	27060307
ECLASS-10.1	27060307
ECLASS-11.1	27060307
ECLASS-12.0	27060307
ETIM-5.0	EC002599
customs tariff number	85444210
GTIN	4048879570824
Packaging unit	1
Electrical data | Supply	
Operating voltage DC max.	60 V
Operating voltage DC max. (UL-listed)	25 V
Current operating per contact max.	1,5 A
Industrial communication	
Transfer parameters	CAT6A
Diagnostics	
Status indication LED	no
Device protection | Electrical	
Degree of protection (EN IEC 60529)	IP20
Pollution Degree	3
Rated surge voltage	1 kV
Material group (IEC 60664-1)	I
Mechanical data	
Contour for corrugated hose	without
Mechanical data | Material data	
Material housing	PUR
Locking material	PA
Mechanical data | Mounting data	
Looking techniques	Snap-in connector
Environmental characteristics | Climatic	
Operating temperature min.	-25 °C
Operating temperature max.	85 °C
Additional condition temperature range	depending on cable quality
Important installation notes	
Note on strain relief	Protect the connectors by suitable measures from mechanical loads, e.g. by the usage of cable ties.
Note on bending radius	**Attention:** Observe the permissible bending radii when laying cables, as the IP protection class can be endangered by excessive bending forces.
Installation | Cable	
wire arrangement	white, blue, white, orange, white, green, white, brown
Cable identification	778
Jacket Color	gray

The information in this Product-PDF has been compiled with the utmost care.
Liability for the correctness completeness and topicality of the information is restricted to gross negligence. Version: 2024-06-18

MURR ELEKTRONIK
stay connected

Amount stranding	4
Stranding	2 wires twisted
Amount stranding (type 2)	1
Stranding (type 2)	4 Stranded joints twisted
Cable shielding (type)	copper braiding, bare
wire arrangement	white, blue, white, orange, white, green, white, brown
Material jacket	FRNC
Outer-diameter (jacket)	6 mm
Tolerance outer diameter (sheath)	± 5 %
Material wire insulation	FRNC
Amount wires	8
Amount strands (wire)	7
Diameter of single wires	27 AWG
Conductor crosssection (wire)	27 AWG
Material conductor wire	Stranded copper wire, bare
Min. operating temperature (static)	-20 °C
Max. operating temperature (fixed)	60 °C
Operating temperature min. (dynamic)	0 °C
Operating temperature max. (dynamic)	50 °C
Flame resistance	IEC 60332-2-2 | UL 1581 § 1100 FT2 | UL 1581 § 1090
chemical resistance	Good, application-related testing
Gasoline resistance	Good, application-related testing
Oil resistance	Good, application-related testing | DIN EN 60811-404
Bending radius (dynamic)	5 x Outer diameter

The information in this Product-PDF has been compiled with the utmost care.
Liability for the correctness completeness and topicality of the information is restricted to gross negligence. Version: 2024-06-18