MURR ELEKTRONIK
stay connected

M12 Power female 0° L-cod. screw terminal

5-pol., max. 2,5mm², 8 - 13mm

Female straight
M12
5-pole
L-coded
Screw terminals
Sealing range (cable Ø)
8...13 mm
The resistance to aggressive media should be individually tested for your application. Further details on request.

Link to Product

Illustration



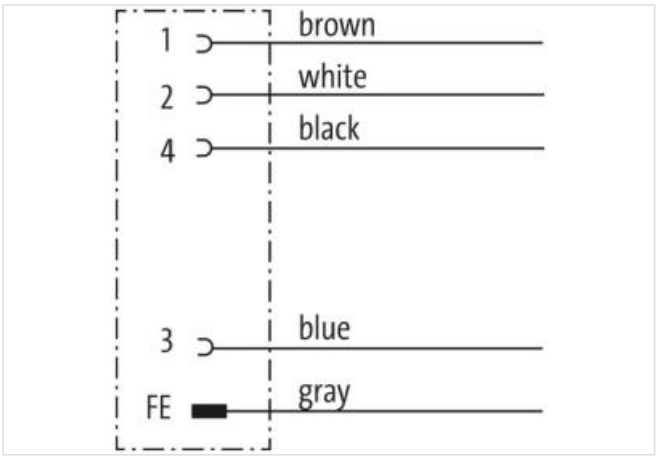

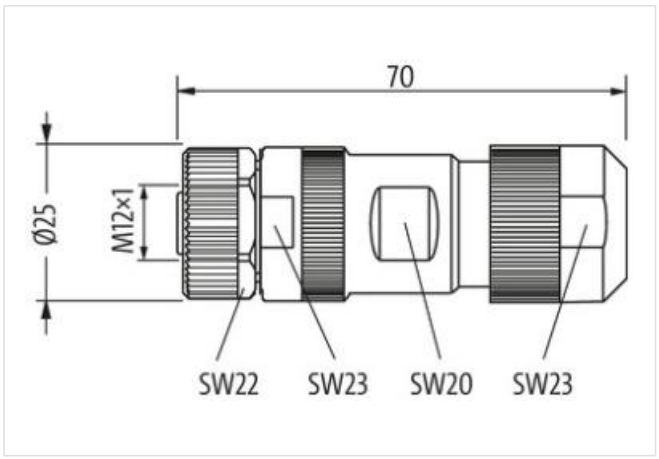

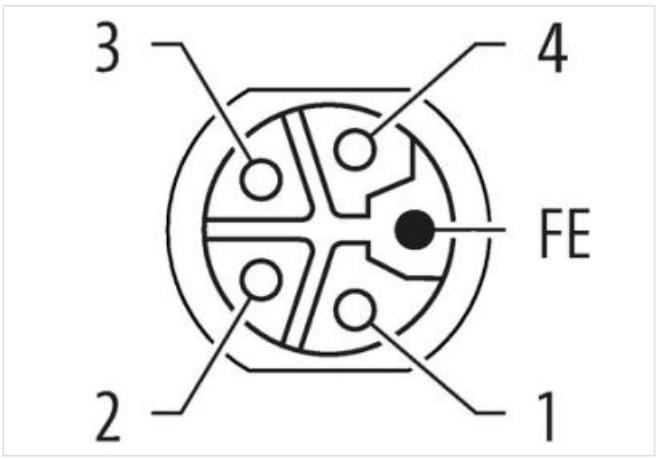

Product may differ from Image

Side 1

Family construction form	M12P
Coding	L

The information in this Product-PDF has been compiled with the utmost care.
Liability for the correctness completeness and topicality of the information is restricted to gross negligence. Version: 2024-06-18

MURR ELEKTRONIK
stay connected

Material contact	Copper alloy
Commercial data	
ECLASS-6.0	27279221
ECLASS-6.1	27260702
ECLASS-7.0	27440102
ECLASS-8.0	27440102
ECLASS-9.0	27440116
ECLASS-10.1	27440102
ECLASS-11.1	27440102
ECLASS-12.0	27440116
ETIM-5.0	EC002635
customs tariff number	85366990
GTIN	4048879786560
Packaging unit	1
Electrical data | Supply	
Operating voltage AC max.	63 V
Operating voltage DC max.	63 V
Current operating per contact max.	16 A
Installation	
Connection cross section max.	2,5 mm²
AWG number max.	14
Installation | Connection	
Connection	Screw terminals SK
Mounting set	M12 x 1
Mating cycles min.	100
Device protection | Electrical	
Degree of protection (EN IEC 60529)	IP67
Additional condition protection degree	inserted, screwed
Pollution Degree	3
Rated surge voltage	1,5 kV
Material group (IEC 60664-1)	II
Overvoltage category (EN 60950-1)	III
Mechanical data | Material data	
Coating contact	gold plated
Material housing	PA
Material contact carrier	PA
Mechanical data | Mounting data	
Mounting method	Schraubgewinde
Clamping range min.	8 mm
Clamping range max.	13 mm
Environmental characteristics | Climatic	
Operating temperature min.	-40 °C
Operating temperature max.	85 °C
Important installation notes	
Note on strain relief	Protect the connectors by suitable measures from mechanical loads, e.g. by the usage of cable ties.
Note on bending radius	**Attention:** Observe the permissible bending radii when laying cables, as the IP protection class can be endangered by excessive bending forces.

The information in this Product-PDF has been compiled with the utmost care.
Liability for the correctness completeness and topicality of the information is restricted to gross negligence. Version: 2024-06-18