MURR ELEKTRONIK
stay connected

M12 female 90° A-cod. with cable F&B Pro

TPE-S 4x0.34 bu UL robot+drag ch. 5m

Plug Connectors for Food & Beverage
Further cable lengths on request.
Female 90°
M12 F&B Pro
4-pole
Stainless steel 1.4404 (V4A)
without cable sleeves
IP69K
Plastic housings with good resistance against chemicals and oils.
The resistance to aggressive media should be individually tested for your application. Further details on request.

Link to Product

Illustration

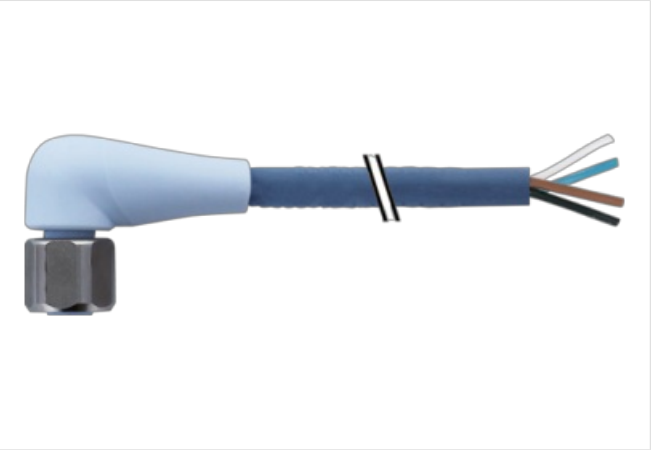

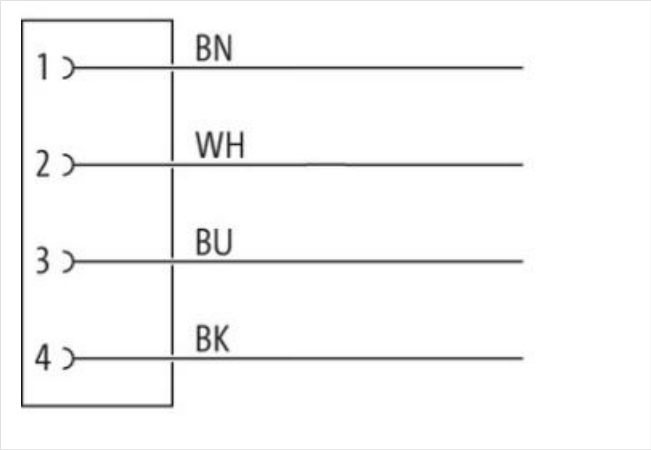

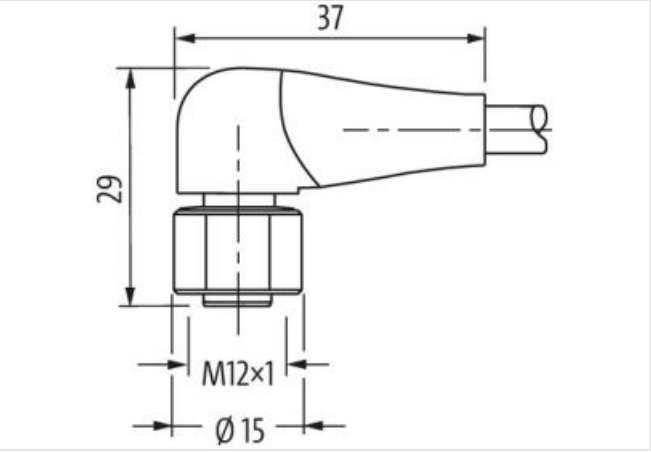

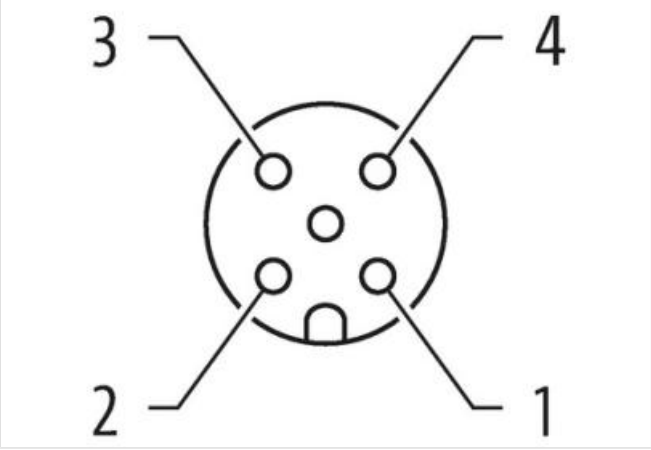

Product may differ from Image

c UL us LISTED

The information in this Product-PDF has been compiled with the utmost care.
Liability for the correctness completeness and topicality of the information is restricted to gross negligence. Version: 2024-06-18

MURR ELEKTRONIK
stay connected

Cable length	5 m
Side 1	
Tightening torque	0,6 Nm
Mounting method	inserted, screwed
Coating contact	gold plated
Family construction form	M12
Thread	M12 x 1
Coding	A
Material contact	Copper alloy
No. of poles	4
Width across flats	SW14
Degree of protection (EN IEC 60529)	IP65, IP68, IP69K
Side 2	
Stripping length (jacket)	20 mm
Commercial data	
ECLASS-6.0	27279218
ECLASS-6.1	27279218
ECLASS-7.0	27279218
ECLASS-8.0	27279218
ECLASS-9.0	27060311
ECLASS-10.1	27060311
ECLASS-11.1	27060311
ECLASS-12.0	27060311
ETIM-5.0	EC001855
customs tariff number	85444290
GTIN	4048879736367
Packaging unit	1
Electrical data | Supply	
Operating voltage AC max.	250 V
Operating voltage DC max.	250 V
Operating voltage AC (UL-listed)	30 V
Operating voltage DC (UL-listed)	30 V
Current operating per contact max.	4 A
Diagnostics	
Status indication LED	no
Installation | Connection	
Stripping length (jacket)	20 mm
Device protection | Electrical	
Additional condition protection degree	inserted, screwed
Pollution Degree	3
Rated surge voltage	2,5 kV
Material group (IEC 60664-1)	I
Mechanical data	
Contour for corrugated hose	without
Mechanical data | Material data	
Color contact carrier	ice blue
Material gasket	EPDM
Material housing	PP
Material contact carrier	PP
Locking material	Stainless steel 1.4404 (V4A)
Mechanical data | Mounting data	

The information in this Product-PDF has been compiled with the utmost care.
Liability for the correctness completeness and topicality of the information is restricted to gross negligence. Version: 2024-06-18

MURR ELEKTRONIK
stay connected

Mounting method	inserted, screwed, Shaking protection
Environmental characteristics | Climatic	
Operating temperature min.	-40 °C
Operating temperature max.	105 °C
Additional condition temperature range	depending on cable quality
Important installation notes	
Note on strain relief	Protect the connectors by suitable measures from mechanical loads, e.g. by the usage of cable ties.
Note on bending radius	**Attention:** Observe the permissible bending radii when laying cables, as the IP protection class can be endangered by excessive bending forces.
Conformity	
Product standard	DIN EN 61076-2-101 (M12), FDA conform
Installation | Cable	
wire arrangement	brown, black, blue, white
Cable identification	321
Jacket Color	blue
Amount stranding	1
Stranding	4 wires twisted
wire arrangement	brown, black, blue, white
Cable weigth	29,7 g/m
Material jacket	TPE-S
Shore hardness jacket	47 ± 5 Shore D
Freedom from ingredients (jacket)	lead-free, cadmium-free, CFC-free, halogen-free, silicone-free
Outer-diameter (jacket)	4,7 mm
Tolerance outer diameter (sheath)	± 5 %
Material wire insulation	PP
Amount wires	4
Outer diameter insulation	1,27 mm
Outer diameter tolerance core insulation	± 5 %
Shore hardness wire insulation	64 ± 3 Shore D
Ingredient freeness wire insulation	lead-free, cadmium-free, CFC-free, halogen-free, silicone-free
Amount strands (wire)	42
Diameter of single wires	0,1 mm
Conductor crosssection (wire)	0,34 mm²
Material conductor wire	Stranded copper wire, bare
Conductor type (wire)	strand class 6
Nominal voltage AC max.	300 V
Current load capacity (standard)	to DIN VDE 0298-4
Current load capacity min. wire	4,8 A
Electrical resistance line constant wire	58 Ω/km @ 20 °C
AC withstand voltage (wire - wire)	3 kV @ 60 s
Min. operating temperature (static)	-40 °C
Max. operating temperature (fixed)	105 °C
Operating temperature min. (dynamic)	-25 °C
Operating temperature max. (dynamic)	105 °C
Flame resistance	UL 1581 § 1100 FT2 | UL 1581 § 1090 | IEC 60332-2-2
chemical resistance	Good, application-related testing
Gasoline resistance	Good, application-related testing
Oil resistance	DIN EN 60811-404 | Good, application-related testing
Bending radius (fixed)	5 x Outer diameter
Bending radius (dynamic)	10 x Outer diameter
No. of bending cycles (C-track)	4 Mio. @ 25 °C
Traversing distance (C-track)	10 m @ 25 °C | horizontal
Travel speed (C-track)	3 m/s @ 25 °C

The information in this Product-PDF has been compiled with the utmost care.
Liability for the correctness completeness and topicality of the information is restricted to gross negligence. Version: 2024-06-18

No. of torsion cycles	2 Mio.
Torsion stress	± 180 °/m
Torsion speed	35 cycles/min

The information in this Product-PDF has been compiled with the utmost care.
Liability for the correctness completeness and topicality of the information is restricted to gross negligence. Version: 2024-06-18