MURR ELEKTRONIK
stay connected

Modlink MSDD-set: Frame 4000-68523-0000001,

insert 4000-68000-4120000

with touch protection

Link to Product

Illustration







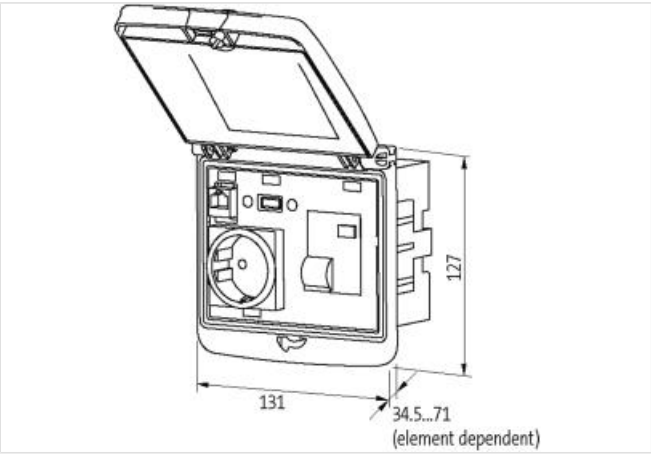

Product may differ from Image

Commercial data

ECLASS-6.0	27144001
ECLASS-6.1	27189217
ECLASS-7.0	27189217
ECLASS-8.0	27189217
ECLASS-9.0	27189217
ECLASS-10.1	27182806
ECLASS-11.1	27182806
ECLASS-12.0	27182806

The information in this Product-PDF has been compiled with the utmost care.
Liability for the correctness completeness and topicality of the information is restricted to gross negligence. Version: 2024-06-13

MURR ELEKTRONIK
stay connected

ETIM-5.0	EC002625
customs tariff number	85366990
GTIN	4048879477970
Packaging unit	1
Mechanical data | Mounting data	
Height	88 mm
Width	116 mm
Depth	72 mm
Frame	
Degree of protection (EN IEC 60529)	IP65
Operating temperature min.	-30 °C
Operating temperature max.	70 °C
Storage temperature min.	-30 °C
Storage temperature max.	80 °C
Suitable for installation wall thickness min.	1 mm
Suitable for installation wall thickness max.	5 mm
Color cover	metallic
Color housing	black
Material lid	ABS
Material housing	PA
Fuse	
Operating voltage AC	250 V
Operating voltage DC	32 V
Nominal current	3 A
USA	
Connection cross section max.	6 mm²
AWG number max.	10
Operating voltage AC	125 V
Operating current	15 A
Connection	Screw terminals SK
No. of poles	2 + PE
Connections per pole	2
Protection contact present	yes
RJ45	
Operating voltage AC max. (UL-listed)	30 V
Operating voltage DC max. (UL-listed)	42,4 V
Current operating max. (UL)	175 mA
Family construction form	RJ45
Family type Back side	RJ45
Cable category min.	Cat5e
Looking techniques	Snap-in connector

The information in this Product-PDF has been compiled with the utmost care.
Liability for the correctness completeness and topicality of the information is restricted to gross negligence. Version: 2024-06-13