Your Expert Partner for **Human Machine Interfaces**

Actuator

Distribution by
DigiKey

17-
411230Z



https://digikey.eao.com/p/17-411230Z

Your product:



17-411230Z
Actuator

FRONT

Reflector:	Plastic, Black
Front dimension:	Ø 18,3 mm
Front form:	round

MOUNTING

Mounting cut-out:	Ø 16.2 mm
Design:	raised

OPERATING-/INDICATION PART

Illumination colour:	Red

ELECTRICAL CHARACTERISTICS

Lumi. Intensity:	140 mcd
Operation current:	3 mA ±15 %
Polarity:	Anode (+) Brass plug-in connector Cathode (-) Brass tinned plug-in connector
Operating voltage:	230 V AC ±10 %

MECHANICAL CHARATERISTIC

Tightening torque:	Fixing nut max. 0.2 Nm
Weight:	0.008 kg
Terminal:	Plug-in terminal, 2.8 x 0.8 mm

AMBIENT CONDITION

Storage temperature: – 25 °C ... + 80 °C

IP Protection: IP40 front side, IP65 front side, according to IEC 60529

Operating temperature: – 20 °C ... + 60 °C

CERTIFICATE

Approbations: UL

Conformities: 2011 / 65 / EC (RoHS), 2014 / 35 / EU (230 VAC)

OTHER

Short Description: Actuator, Ø 16.2 mm, Ø 18,3 mm, round, Plug-in terminal, 2.8 x 0.8 mm, Red

Hints: Connectors: Brass terminal = anode (+); brass tinned terminal = cathode (-),IP67 front side gap between LED and reflector and gap between reflector and frontplate sealed to IP67 when using the supplied gasket.,The plastic is limited resistant to chemicals.

Kind of illlumination: Single-LED

Mounting cut-outs:

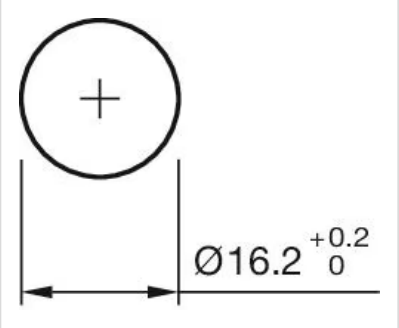

Dimension drawings:

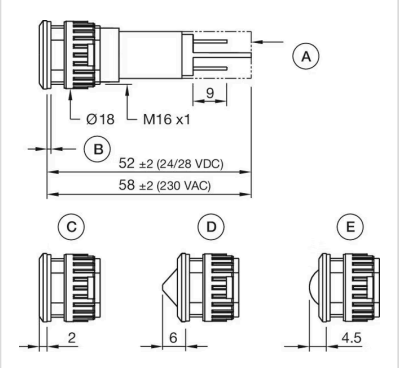

Wiring diagrams:

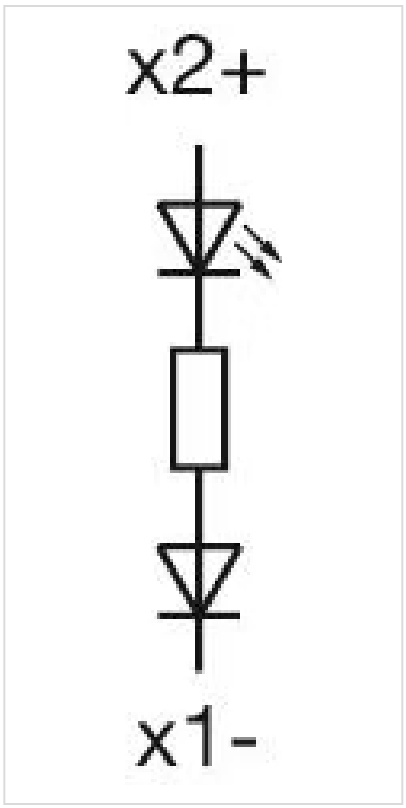
x2+
x1-