Your Expert Partner for **Human Machine Interfaces**

Actuator

Distribution by
DigiKey

18-
082.0054L



https://digikey.eao.com/p/18-082.0054L

Your product:



18-082.0054L
Actuator

FRONT

Front bezel colour:	Black
Front form:	square
Front dimension:	19 mm x 19 mm
Front bezel material:	Plastic

MOUNTING

Design:	flush

OPERATING-/INDICATION PART

Lens illumination:	illuminative
Lens colour:	Yellow
Lens shape:	flush
Lens optics:	translucent
Lens material:	Plastic
Illumination colour:	Yellow

ELECTRICAL CHARACTERISTICS

Operating voltage:	24 V DC ±10 %

MECHANICAL CHARATERISTIC

Terminal:	Soldering terminal
Weight:	0.003 kg

OTHER

Short Description: Actuator, 19 mm x 19 mm, flush, illuminative, Yellow, Plastic, translucent, square, Black, Plastic, Soldering terminal, Yellow

Dimension: 13.8 mm x 13.8 mm

Wiring diagrams:

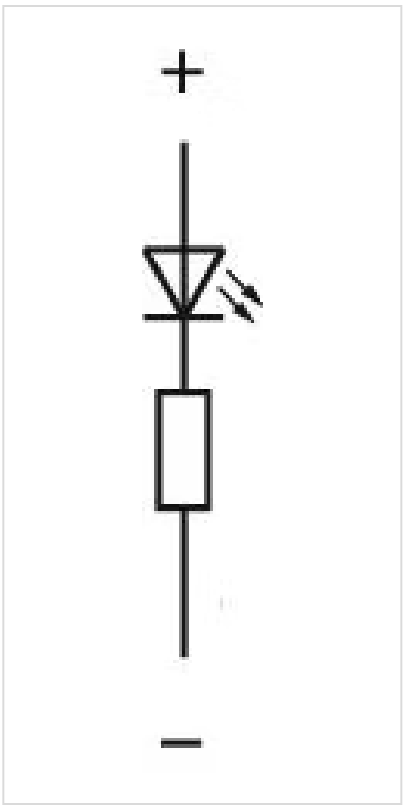

Mounting cut-outs:

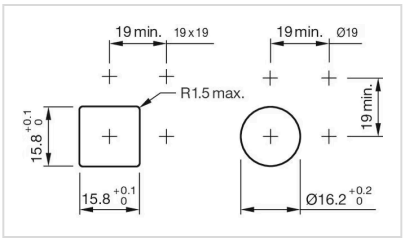

Component layouts:

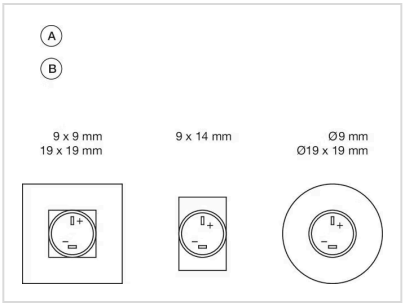

Dimension drawings:

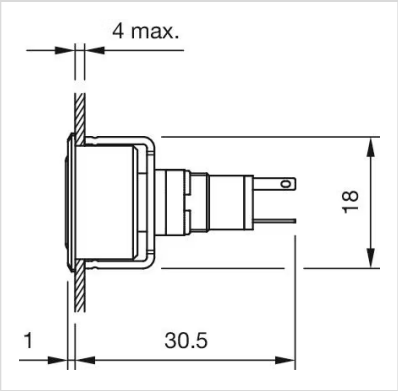
4 max.
18
1
30.5