Your Expert Partner for **Human Machine Interfaces**

Actuator

Distribution by
DigiKey

92-
140.000



https://digikey.eao.com/p/92-140.000

Your product:



92-140.000
Actuator

FRONT

Front bezel material:	Plastic
Front form:	square
Front dimension:	18,8 mm x 18,8 mm
Front bezel colour:	Black

MOUNTING

Design:	PCB

MECHANICAL CHARATERISTIC

Weight:	0.003 kg
Tightening torque:	Fixing nut max. 0.5 Nm, Fixing screw mounting flange 0.4 Nm

AMBIENT CONDITION

IP Protection:	IP67 front side
Storage temperature:	– 40 °C ... + 80 °C
Operating temperature:	– 25 °C ... + 70 °C
IP front protection:	IP67

CERTIFICATE

Conformities:	CE, UKCA, 2011 / 65 / EC (RoHS), 2014 / 35 / EU (LVD)
Approbations:	CQC

OTHER

Housing colour: Black

Dimension: 18,8 mm x 18,8 mm

Short Description: Actuator, 18,8 mm x 18,8 mm, square, Black, Plastic, IP67

Housing material: Plastic

Wiring diagrams:

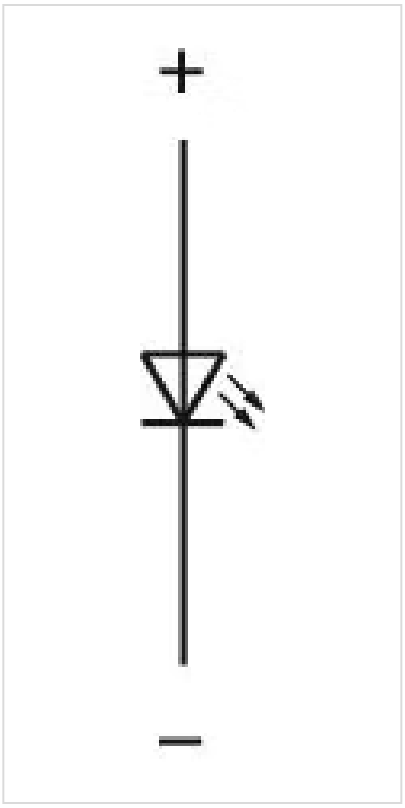

Mounting cut-outs:

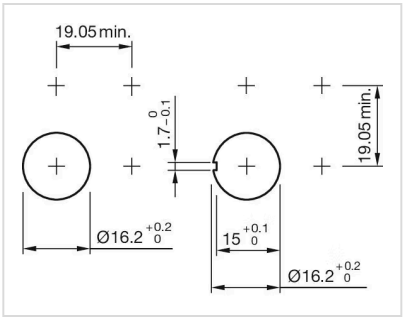

Dimension drawings:

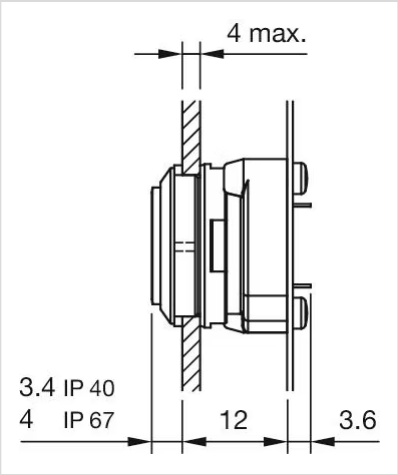
4 max.
3.4 IP 40
4 IP 67
12
3.6