Your Expert Partner for **Human Machine Interfaces**

Actuator

Distribution by
DigiKey

92-
356.800

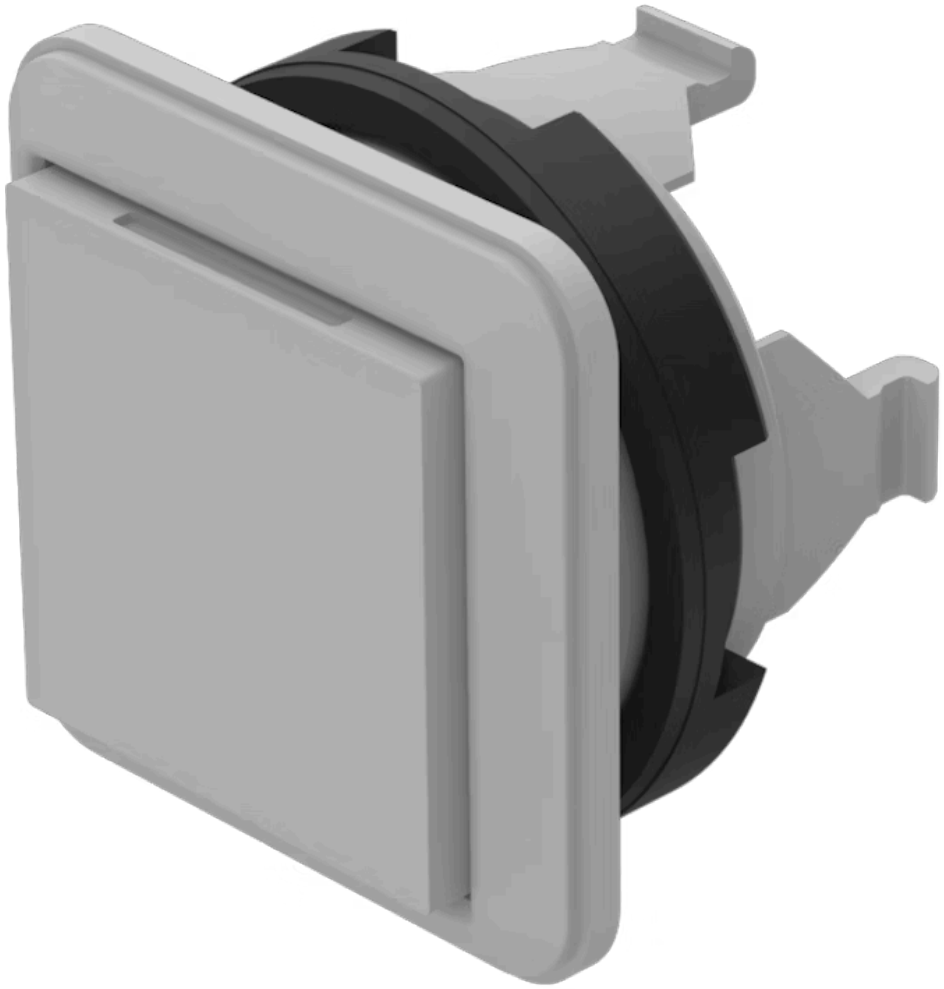

https://digikey.eao.com/p/92-356.800

Your product:



92-356.800
Actuator

FRONT

Front form:	square
Front bezel colour:	White
Front bezel material:	Plastic
Front dimension:	18,4 mm x 18,4 mm

MOUNTING

Design:	PCB

OPERATING-/INDICATION PART

Lens shape:	flush
Lens optics:	opaque
Lens illumination:	non illuminative
Lens colour:	Grey
Lens material:	Plastic

ELECTRICAL CHARACTERISTICS

Switching voltage and switching current:	Switching voltage	min. 50 m VAC/DC max. 42 VAC/DC
	Switching current	min. 10 µA AC/DC max. 100 mA AC/DC
	Power rating	max. 2 W
Electrical lifetime:	500 000 cycles of operation at 42VDC, 50mA, according to IEC 6512-5-9c	
Electric strength:	500 VAC, 50 Hz, 1 minute according to IEC 60512-5-9c	
Electrostatic discharge (ESD):	15 kV	

MECHANICAL CHARATERISTIC

Operating Travel:	ca. 0.4 mm switching element
Tightening torque:	Fixing nut max. 0.5 Nm, Fixing screw mounting flange 0.4 Nm
Switching action:	Momentary
Weight:	0.002 kg
Operating force:	2.7 N ±1 N switching element, 5 N lens
Switching system:	Short-travel element
Switching system:	Short-travel switching system with 2 independent contact points Guarantees reliable switching even of very light loads. Fitted with 1 normally open contact.
Mechanical lifetime:	≥1 Mio. cycles of operation

AMBIENT CONDITION

Vibration resistance:	Max. 100 m / s^2 from 10 Hz ... 500 Hz, 10 cycles, 3-axis (sinusoidal EN IEC 60068-2-6)
IP Protection:	IP40 front side
Shock resistance:	Max. 500 m/s^2, pulse width, 3-axis (sinusoidal EN IEC 60068-2-27)
Operating temperature:	– 25 °C ... + 70 °C
Storage temperature:	– 40 °C ... + 80 °C

CERTIFICATE

Conformities:	CE, UKCA, 2011 / 65 / EC (RoHS), 2014 / 35 / EU (LVD)
Approbations:	CQC

OTHER

Dimension:	18.4 mm x 18.4 mm
Housing colour:	White
Short Description:	Actuator, 18,4 mm x 18,4 mm, flush, non illuminative, Grey, Plastic, opaque, square, White, Plastic, Momentary
Housing material:	Plastic
Dimension drawings:	

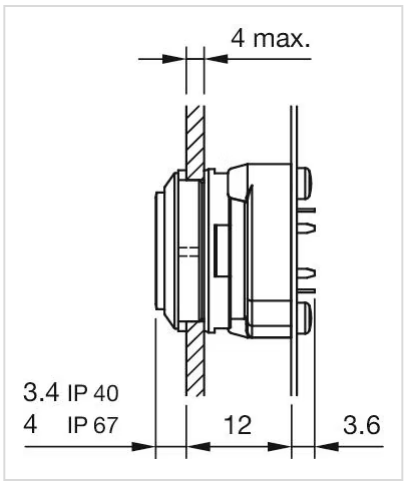

Wiring diagrams:

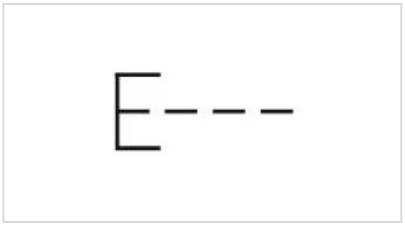

Mounting cut-outs:

