Your Expert Partner for **Human Machine Interfaces**

Actuator

Distribution by
DigiKey

704.003.6



https://digikey.eao.com/p/704.003.6

Your product:



704.003.6
Actuator

FRONT

Front form:	round
Front bezel material:	Plastic
Front bezel colour:	Grey
Front dimension:	Ø 29 mm

MOUNTING

Design:	raised

OPERATING-/INDICATION PART

Lens shape:	flush
Marking plate optics:	transparent
Lens colour:	Blue
Marking plate colour:	Colourless
Lens optics:	transparent
Lens material:	Plastic
Marking plate illumination:	illuminative

ELECTRICAL CHARACTERISTICS

Standards:	The switches comply with the “Standards for low-voltage switching devices” DIN EN 60947-1

MECHANICAL CHARATERISTIC

Weight:	0.05 kg

Terminal: Screw terminal

AMBIENT CONDITION

IP Protection: IP65 front side

Operating temperature: – 40 °C ... + 55 °C

Storage temperature: – 40 °C ... + 85 °C

OTHER

Housing colour: Grey

Short Description: Actuator, Ø 29 mm, flush, Blue, Plastic, transparent, round, Grey, Plastic, Screw terminal

Housing material: Plastic

Mounting cut-outs:

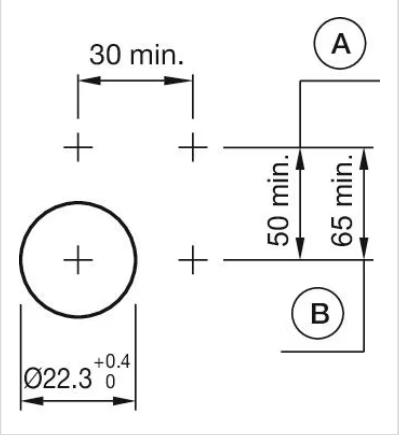

Dimension drawings:

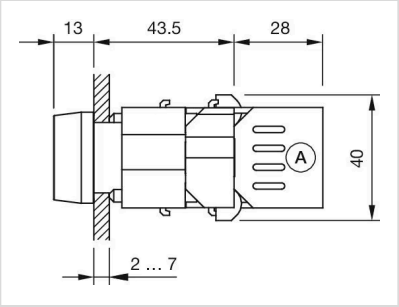

Wiring diagrams:

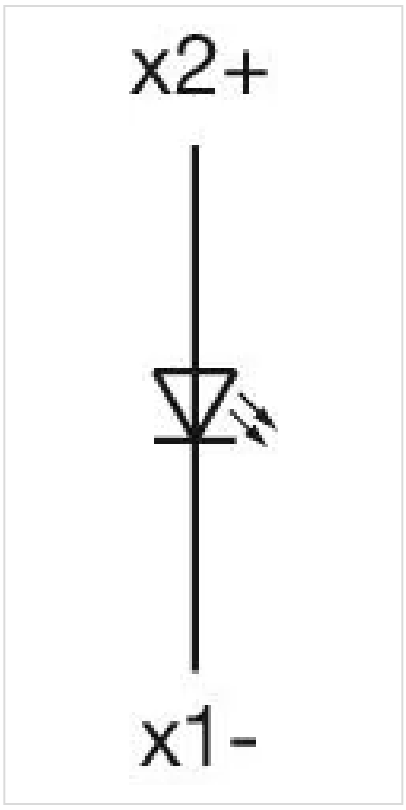
x2+
x1-