D38999 Series II PCB TAIL SOCKETS
with FLANGE Stick-Out

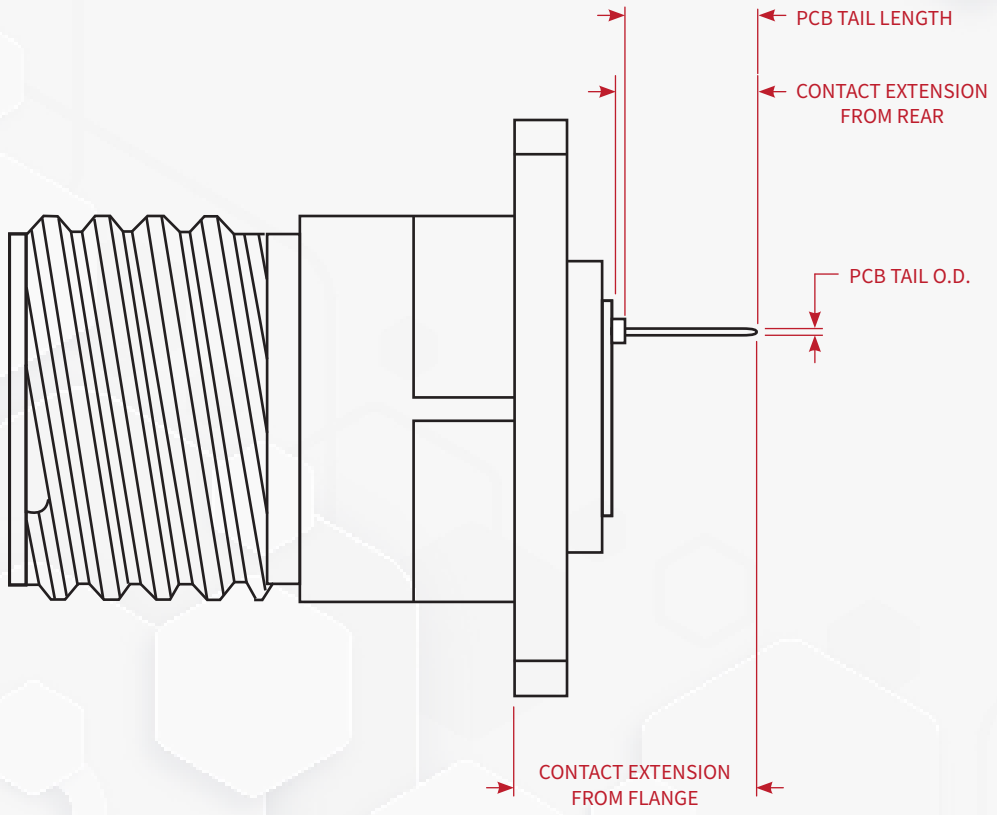

Style A
Box Mount Receptacle

Customizable PC Tail Pins For MIL-DTL-D38999 Series II Style Connectors

SPECIFICATIONS:

- ***SAE-AS39029:*** Mating interface meets or exceeds the requirements and specifications of M39029/xx-xxx
- ***Contact Material:*** Suitable copper alloy
- ***Mating Interface Finish:*** Gold plate per IAW ASTM B488-01, Type II, Code C, Class 1.25 (.000050 Min) over nickel IAW AMS QQ-N-290, Class 1, .000050-.000100 thick
- ***‡ Extension Tolerances:*** ± 0.02 (0.51 mm)
- ***Note:*** #22M and #22D contacts are interchangeable
- For all connector brands other than **Amphenol** please use the ***Extension from FLANGE*** measurements to determine stick out

D38999 Series II PCB TAIL SOCKETS
with FLANGE Stick-Out

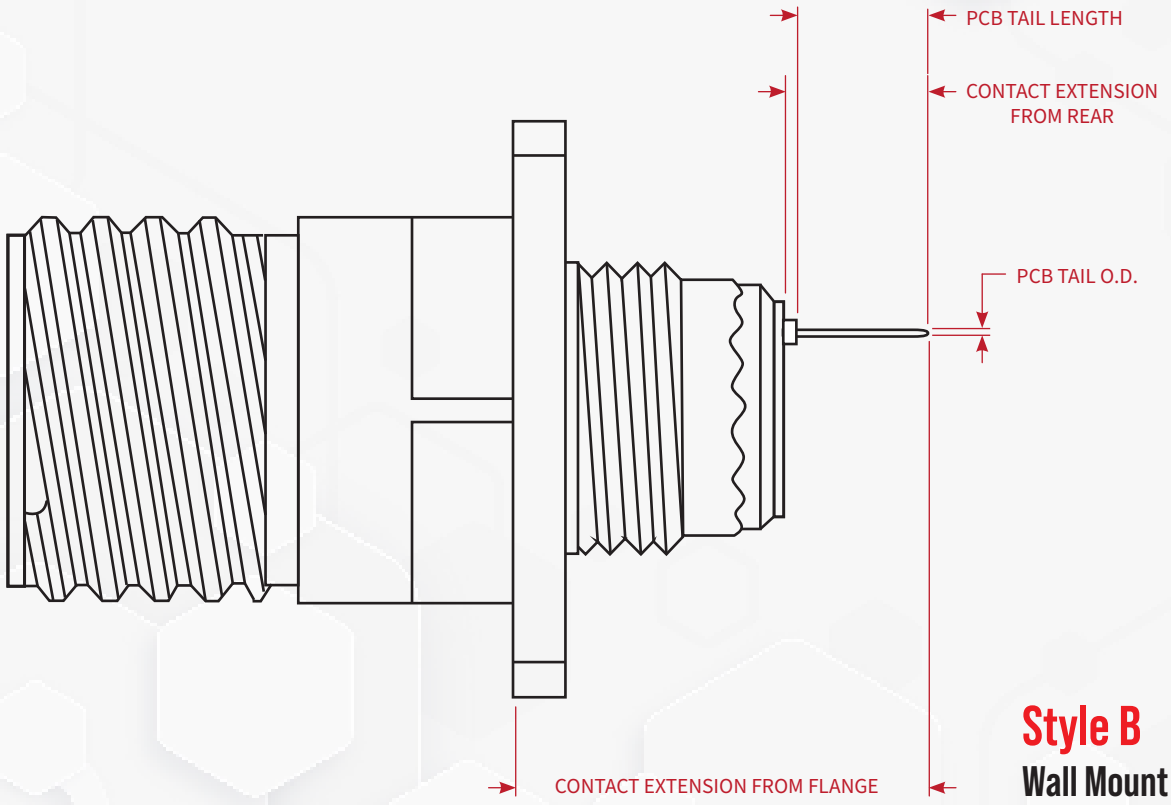

Style B
Wall Mount Receptacle

Customizable PC Tail Pins For MIL-DTL-D38999 Series II Style Connectors

SPECIFICATIONS:

- ***SAE-AS39029:*** Mating interface meets or exceeds the requirements and specifications of M39029/xx-xxx
- ***Contact Material:*** Suitable copper alloy
- ***Mating Interface Finish:*** Gold plate per IAW ASTM B488-01, Type II, Code C, Class 1.25 (.000050 Min) over nickel IAW AMS QQ-N-290, Class 1, .000050-.000100 thick
- ***‡ Extension Tolerances:*** ± 0.02 (0.51 mm)
- ***Note:*** #22M and #22D contacts are interchangeable
- For all connector brands other than **Amphenol** please use the ***Extension from FLANGE*** measurements to determine stick out

D38999 Series II PCB TAIL SOCKETS
with FLANGE Stick-Out

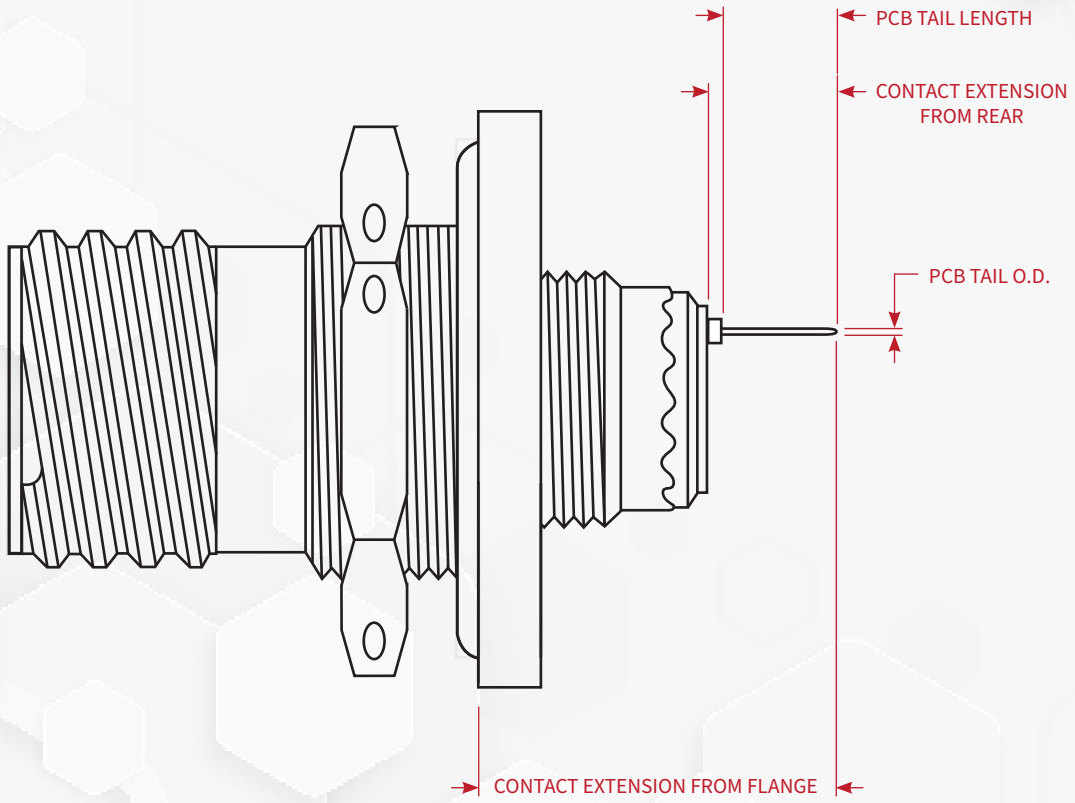

Style C
Jam Nut Receptacle

Customizable PC Tail Pins For MIL-DTL-D38999 Series II Style Connectors

SPECIFICATIONS:

- ***SAE-AS39029:*** Mating interface meets or exceeds the requirements and specifications of M39029/xx-xxx
- ***Contact Material:*** Suitable copper alloy
- ***Mating Interface Finish:*** Gold plate per IAW ASTM B488-01, Type II, Code C, Class 1.25 (.000050 Min) over nickel IAW AMS QQ-N-290, Class 1, .000050-.000100 thick
- ***‡ Extension Tolerances:*** ± 0.02 (0.51 mm)
- ***Note:*** #22M and #22D contacts are interchangeable
- For all connector brands other than **Amphenol** please use the ***Extension from FLANGE*** measurements to determine stick out

Milnec Part Number M30929 Derivative	Contact Size & Type	PCB Tail		CONTACT EXTENSION FROM AMPHENOL REAR ±.003					CONTACT EXTENSION FROM FLANGE ±.003				
		O.D.	Length	MS27472, MS27479	MS27664, MS27497	MS27499, MS27504, MS27513	MS27508	MS27474, MS27481	MS27472, MS27479	MS27664, MS27497	MS27499, MS27504, MS27513	MS27508	MS27474, MS27481
		±.001	±.001										
TXR4PCT-2200-360	22D Pin	0.019	0.205	NONE	NONE	0.202	0.202	NONE	NONE	NONE	0.547	0.417	NONE
TXR4PCT-2201-360	22D Pin	0.02	0.42	0.35	0.35	0.544	0.544	0.35	0.89	0.77	0.889	0.759	0.75
TXR3PCT-2202-360	22D Pin	0.015	0.24	0.068	0.068	0.262	0.262	0.068	0.608	0.488	0.607	0.477	0.468
TXR3PCT-2203-360	22D Pin	0.015	0.34	0.168	0.168	0.362	0.362	0.168	0.708	0.588	0.707	0.577	0.568
TXR3PCT-2204-360	22D Pin	0.015	0.44	0.268	0.268	0.462	0.462	0.268	0.808	0.688	0.807	0.677	0.668
TXR3PCT-2205-360	22D Pin	0.019	0.54	0.368	0.368	0.562	0.562	0.368	0.908	0.788	0.907	0.777	0.768
TXR4PCT-2205-360	22D Pin	0.019	0.54	0.368	0.368	0.562	0.562	0.368	0.908	0.788	0.907	0.777	0.768
TXR4PCT-2206-360	22D Pin	0.02	0.538	0.535	0.535	0.729	0.729	0.535	1.075	0.955	1.074	0.944	0.935
TXR4PCT-2207-360	22D Pin	0.019	0.232	0.23	0.23	0.424	0.424	0.23	0.77	0.65	0.769	0.639	0.63
TXR4PCT-2208-360	22D Pin	0.025	0.245	0.376	0.376	0.57	0.57	0.376	0.916	0.796	0.915	0.785	0.776
TXR4PCT-2209-360	22D Pin	0.02	0.25	NONE	NONE	0.195	0.195	NONE	NONE	NONE	0.54	0.41	NONE
TXR4PCT-2210-360	22D Pin	0.02	0.437	0.279	0.279	0.473	0.473	0.279	0.819	0.699	0.818	0.688	0.679
TXR4PCT-2211-360	22D Pin	0.019	0.266	0.196	0.196	0.39	0.39	0.196	0.736	0.616	0.735	0.605	0.596
TXR4PCT-2212-360	22D Pin	0.02	0.355	0.158	0.158	0.352	0.352	0.158	0.698	0.578	0.697	0.567	0.558
TXR4PCT-2213-360	22D Pin	0.021	0.345	0.343	0.343	0.537	0.537	0.343	0.883	0.763	0.882	0.752	0.743
TXR4PCT-2214-360	22D Pin	0.019	0.145	0.144	0.144	0.338	0.338	0.144	0.684	0.564	0.683	0.553	0.544
TXR4PCT-2215-360	22D Pin	0.021	0.283	0.281	0.281	0.475	0.475	0.281	0.821	0.701	0.82	0.69	0.681
TXR4PCT-2216-360	22D Pin	0.02	0.122	NONE	NONE	0.149	0.149	NONE	NONE	NONE	0.494	0.364	NONE
TXR4PCT-2217-360	22D Pin	0.019	0.178	0.464	0.464	0.658	0.658	0.464	1.004	0.884	1.003	0.873	0.864
TXR4PCT-2218-360	22D Pin	0.02	0.336	0.363	0.363	0.557	0.557	0.363	0.903	0.783	0.902	0.772	0.763
TXR4PCT-2220-360	22D Pin	0.019	0.276	0.285	0.285	0.479	0.479	0.285	0.825	0.705	0.824	0.694	0.685
TXR4PCT-2221-360	22D Pin	0.02	0.283	1.049	1.049	1.243	1.243	1.049	1.589	1.469	1.588	1.458	1.449
TXR4PCT-2223-360	22D Pin	0.025	0.365	0.471	0.471	0.665	0.665	0.471	1.011	0.891	1.01	0.88	0.871
TXR4PCT-2225-360	22D Pin	0.019	0.492	0.424	0.424	0.618	0.618	0.424	0.964	0.844	0.963	0.833	0.824
TXR4PCT-2226-360	22D Pin	0.024	0.114	NONE	NONE	0.13	0.13	NONE	NONE	NONE	0.475	0.345	NONE
TXR4PCT-2227-360	22D Pin	0.027	0.227	0.472	0.472	0.666	0.666	0.472	1.012	0.892	1.011	0.881	0.872
TXR4PCT-2228-360	22D Pin	0.025	0.396	0.041	0.041	0.235	0.235	0.041	0.581	0.461	0.58	0.45	0.441
TXR4PCT-2229-360	22D Pin	0.03	0.3	0.364	0.364	0.558	0.558	0.364	0.904	0.784	0.903	0.773	0.764
TXR4PCT-2230-360	22D Pin	0.02	0.22	0.054	0.054	0.248	0.248	0.054	0.594	0.474	0.593	0.463	0.454
TXR4PCT-2231-360	22D Pin	0.02	0.407	0.251	0.251	0.445	0.445	0.251	0.791	0.671	0.79	0.66	0.651
TXR4PCT-2232-360	22D Pin	0.02	0.45	0.234	0.234	0.428	0.428	0.234	0.774	0.654	0.773	0.643	0.634
TXR4PCT-2233-360	22D Pin	0.02	0.44	0.222	0.222	0.416	0.416	0.222	0.762	0.642	0.761	0.631	0.622
TXR4PCT-2234-360	22D Pin	0.02	0.277	0.121	0.121	0.315	0.315	0.121	0.661	0.541	0.66	0.53	0.521
TXR4PCT-2235-360	22D Pin	0.019	0.211	NONE	NONE	0.207	0.207	NONE	NONE	NONE	0.552	0.422	NONE
TXR4PCT-2236-360	22D Pin	0.019	0.18	0.179	0.179	0.373	0.373	0.179	0.719	0.599	0.718	0.588	0.579
TXR4PCT-2237-360	22D Pin	0.03	0.763	0.609	0.609	0.803	0.803	0.609	1.149	1.029	1.148	1.018	1.009
TXR4PCT-2238-360	22D Pin	0.03	0.893	0.739	0.739	0.933	0.933	0.739	1.279	1.159	1.278	1.148	1.139
TXR4PCT-2239-360	22D Pin	0.02	0.169	0.207	0.207	0.401	0.401	0.207	0.747	0.627	0.746	0.616	0.607
TXR4PCT-2240-360	22D Pin	0.019	0.131	NONE	NONE	0.123	0.123	NONE	NONE	NONE	0.468	0.338	NONE
TXR4PCT-2241-360	22D Pin	0.0275	0.157	0.238	0.238	0.432	0.432	0.238	0.778	0.658	0.777	0.647	0.638
TXR4PCT-2243-360	22D Pin	0.019	0.157	0.213	0.213	0.407	0.407	0.213	0.753	0.633	0.752	0.622	0.613
TXR4PCT-2244-360	22D Pin	0.02	0.18	0.178	0.178	0.372	0.372	0.178	0.718	0.598	0.717	0.587	0.578
TXR4PCT-2245-360	22D Pin	0.02	0.121	0.183	0.183	0.377	0.377	0.183	0.723	0.603	0.722	0.592	0.583
TXR4PCT-2246-360	22D Pin	0.019	0.094	0.092	0.092	0.286	0.286	0.092	0.632	0.512	0.631	0.501	0.492
TXR4PCT-2247-360	22D Pin	0.025	0.329	0.406	0.406	0.6	0.6	0.406	0.946	0.826	0.945	0.815	0.806
TXR4PCT-2248-360	22D Pin	0.032	0.4	0.417	0.417	0.611	0.611	0.417	0.957	0.837	0.956	0.826	0.817
TXR4PCT-2249-360	22D Pin	0.022	0.17	0.265	0.265	0.459	0.459	0.265	0.805	0.685	0.804	0.674	0.665
TXR3PCT-2250-360	22D Pin	0.019	0.544	0.479	0.479	0.673	0.673	0.479	1.019	0.899	1.018	0.888	0.879
TXR4PCT-2251-360	22D Pin	0.019	0.236	0.417	0.417	0.611	0.611	0.417	0.957	0.837	0.956	0.826	0.817
TXR4PCT-2252-360	22D Pin	0.019	0.205	0.745	0.745	0.939	0.939	0.745	1.285	1.165	1.284	1.154	1.145
TXR3PCT-2253-360	22D Pin	0.019	0.5	0.613	0.613	0.807	0.807	0.613	1.153	1.033	1.152	1.022	1.013
TXR4PCT-2254-360	22D Pin	0.025	0.145	0.279	0.279	0.473	0.473	0.279	0.819	0.699	0.818	0.688	0.679
TXR3PCT-2255-360	22D Pin	0.025	0.445	0.581	0.581	0.775	0.775	0.581	1.121	1.001	1.12	0.99	0.981
TXR4PCT-2256-360	22D Pin	0.025	0.345	0.481	0.481	0.675	0.675	0.481	1.021	0.901	1.02	0.89	0.881

Milnec Part Number M30929 Derivative	Contact Size & Type	PCB Tail		CONTACT EXTENSION FROM AMPHENOL REAR ±.003					CONTACT EXTENSION FROM FLANGE ±.003				
		O.D. ±.001	Length ±.001	MS27472, MS27479	MS27664, MS27497	MS27499, MS27504, MS27513	MS27508	MS27474, MS27481	MS27472, MS27479	MS27664, MS27497	MS27499, MS27504, MS27513	MS27508	MS27474, MS27481
TXR4PCT-2257-360	22D Pin	0.029	0.118	0.362	0.362	0.556	0.556	0.362	0.902	0.782	0.901	0.771	0.762
TXR4PCT-2258-360	22D Pin	0.025	0.545	0.677	0.677	0.871	0.871	0.677	1.217	1.097	1.216	1.086	1.077
TXR4PCT-2259-360	22D Pin	0.031	0.762	0.609	0.609	0.803	0.803	0.609	1.149	1.029	1.148	1.018	1.009
TXR4PCT-2260-360	22D Pin	0.025	0.515	0.277	0.277	0.471	0.471	0.277	0.817	0.697	0.816	0.686	0.677
TXR4PCT-2261-360	22D Pin	0.03	0.148	0.336	0.336	0.53	0.53	0.336	0.876	0.756	0.875	0.745	0.736
TXR4PCT-2262-360	22D Pin	0.019	0.137	0.306	0.306	0.5	0.5	0.306	0.846	0.726	0.845	0.715	0.706
TXR4PCT-2263-360	22D Pin	0.019	0.251	0.569	0.569	0.763	0.763	0.569	1.109	0.989	1.108	0.978	0.969
TXR4PCT-2264-360	22D Pin	0.019	0.267	0.113	0.113	0.307	0.307	0.113	0.653	0.533	0.652	0.522	0.513
TXR4PCT-2265-360	22D Pin	0.019	0.41	0.417	0.417	0.611	0.611	0.417	0.957	0.837	0.956	0.826	0.817
TXR4PCT-2266-360	22D Pin	0.019	0.345	0.193	0.193	0.387	0.387	0.193	0.733	0.613	0.732	0.602	0.593
TXR4PCT-2267-360	22D Pin	0.019	0.43	0.278	0.278	0.472	0.472	0.278	0.818	0.698	0.817	0.687	0.678
TXR4PCT-2268-360	22D Pin	0.019	0.152	NONE	NONE	0.172	0.172	NONE	NONE	NONE	0.517	0.387	NONE
TXR4PCT-2269-360	22D Pin	0.019	0.157	NONE	NONE	0.062	0.062	NONE	NONE	NONE	0.407	0.277	NONE
TXR4PCT-2270-360	22D Pin	0.019	0.165	0.335	0.335	0.529	0.529	0.335	0.875	0.755	0.874	0.744	0.735
TXR4PCT-2271-360	22D Pin	0.025	0.63	0.764	0.764	0.958	0.958	0.764	1.304	1.184	1.303	1.173	1.164
TXR3PCT-2272-360	22D Pin	0.019	0.769	0.616	0.616	0.81	0.81	0.616	1.156	1.036	1.155	1.025	1.016
TXR3PCT-2273-360	22D Pin	0.019	0.509	0.26	0.26	0.454	0.454	0.26	0.8	0.68	0.799	0.669	0.66
TXR4PCT-2274-360	22D Pin	0.019	0.13	0.041	0.041	0.235	0.235	0.041	0.581	0.461	0.58	0.45	0.441
TXR4PCT-2275-360	22D Pin	0.019	0.2	0.266	0.266	0.46	0.46	0.266	0.806	0.686	0.805	0.675	0.666
TXR4PCT-2276-360	22D Pin	0.019	0.36	0.371	0.371	0.565	0.565	0.371	0.911	0.791	0.91	0.78	0.771
TXR4PCT-2278-360	22D Pin	0.019	0.24	0.257	0.257	0.451	0.451	0.257	0.797	0.677	0.796	0.666	0.657
TXR4PCT-2279-360	22D Pin	0.026	0.182	0.161	0.161	0.355	0.355	0.161	0.701	0.581	0.7	0.57	0.561
TXR3PCT-2280-360	22D Pin	0.019	0.578	0.509	0.509	0.703	0.703	0.509	1.049	0.929	1.048	0.918	0.909
TXR3PCT-2281-360	22D Pin	0.019	0.522	0.453	0.453	0.647	0.647	0.453	0.993	0.873	0.992	0.862	0.853
TXR4PCT-2282-360	22D Pin	0.019	0.24	0.233	0.233	0.427	0.427	0.233	0.773	0.653	0.772	0.642	0.633
TXR4PCT-2283-360	22D Pin	0.019	0.407	0.25	0.25	0.444	0.444	0.25	0.79	0.67	0.789	0.659	0.65
TXR4PCT-2284-360	22D Pin	0.019	0.205	0.038	0.038	0.232	0.232	0.038	0.578	0.458	0.577	0.447	0.438
TXR4PCT-2285-360	22D Pin	0.019	0.205	0.888	0.888	1.082	1.082	0.888	1.428	1.308	1.427	1.297	1.288
TXR4PCT-2286-360	22D Pin	0.019	0.324	1.245	1.245	1.439	1.439	1.245	1.785	1.665	1.784	1.654	1.645
TXR4PCT-2287-360	22D Pin	0.019	0.411	0.254	0.254	0.448	0.448	0.254	0.794	0.674	0.793	0.663	0.654
TXR4PCT-2288-360	22D Pin	0.019	0.24	0.233	0.233	0.427	0.427	0.233	0.773	0.653	0.772	0.642	0.633
TXR3PCT-2289-360	22D Pin	0.019	0.513	0.991	0.991	1.185	1.185	0.991	1.531	1.411	1.53	1.4	1.391
TXR4PCT-2290-360	22D Pin	0.019	0.14	NONE	NONE	0.137	0.137	NONE	NONE	NONE	0.482	0.352	NONE
TXR4PCT-2291-360	22D Pin	0.019	0.2	0.073	0.073	0.267	0.267	0.073	0.613	0.493	0.612	0.482	0.473
TXR4PCT-2292-360	22D Pin	0.019	0.22	NONE	NONE	0.102	0.102	NONE	NONE	NONE	0.447	0.317	NONE
TXR4PCT-2293-360	22D Pin	0.019	0.643	0.288	0.288	0.482	0.482	0.288	0.828	0.708	0.827	0.697	0.688
TXR4PCT-2294-360	22D Pin	0.019	0.292	0.223	0.223	0.417	0.417	0.223	0.763	0.643	0.762	0.632	0.623
TXR4PCT-2295-360	22D Pin	0.019	0.254	0.217	0.217	0.411	0.411	0.217	0.757	0.637	0.756	0.626	0.617
TXR4PCT-2296-360	22D Pin	0.019	0.086	0.161	0.161	0.355	0.355	0.161	0.701	0.581	0.7	0.57	0.561
TXR4PCT-2297-360	22D Pin	0.019	0.35	0.19	0.19	0.384	0.384	0.19	0.73	0.61	0.729	0.599	0.59
TXR4PCT-2298-360	22D Pin	0.019	0.467	0.398	0.398	0.592	0.592	0.398	0.938	0.818	0.937	0.807	0.798
TXR4PCT-2299-360	22D Pin	0.019	0.29	0.058	0.058	0.252	0.252	0.058	0.598	0.478	0.597	0.467	0.458
TXR4PCT-2253B-360	22D Pin	0.03	0.25	0.26	0.26	0.454	0.454	0.26	0.8	0.68	0.799	0.669	0.66
TXR4PCT-2254B-360	22D Pin	0.031	0.197	0.205	0.205	0.399	0.399	0.205	0.745	0.625	0.744	0.614	0.605
TXR4PCT-2255B-360	22D Pin	0.019	0.17	0.323	0.323	0.517	0.517	0.323	0.863	0.743	0.862	0.732	0.723
TXR4PCT-2256B-360	22D Pin	0.019	0.256	0.399	0.399	0.593	0.593	0.399	0.939	0.819	0.938	0.808	0.799
TXR4PCT-2257B-360	22D Pin	0.019	0.31	0.303	0.303	0.497	0.497	0.303	0.843	0.723	0.842	0.712	0.703
TXR4PCT-2258B-360	22D Pin	0.019	0.148	0.081	0.081	0.275	0.275	0.081	0.621	0.501	0.62	0.49	0.481
TXR3PCT-2259B-360	22D Pin	0.019	0.45	0.184	0.184	0.378	0.378	0.184	0.724	0.604	0.723	0.593	0.584
TXR4PCT-2260B-360	22D Pin	0.019	0.47	0.313	0.313	0.507	0.507	0.313	0.853	0.733	0.852	0.722	0.713
TXR4PCT-2261B-360	22D Pin	0.019	0.285	0.303	0.303	0.497	0.497	0.303	0.843	0.723	0.842	0.712	0.703
TXR4PCT-2262B-360	22D Pin	0.019	0.285	0.297	0.297	0.491	0.491	0.297	0.837	0.717	0.836	0.706	0.697
TXR4PCT-2263B-360	22D Pin	0.019	0.265	0.196	0.196	0.39	0.39	0.196	0.736	0.616	0.735	0.605	0.596
TXR4PCT-2264B-360	22D Pin	0.019	0.118	0.184	0.184	0.378	0.378	0.184	0.724	0.604	0.723	0.593	0.584

Milnec Part Number M30929 Derivative	Contact Size & Type	PCB Tail		CONTACT EXTENSION FROM AMPHENOL REAR ±.003					CONTACT EXTENSION FROM FLANGE ±.003				
		O.D. ±.001	Length ±.001	MS27472, MS27479	MS27664, MS27497	MS27499, MS27504, MS27513	MS27508	MS27474, MS27481	MS27472, MS27479	MS27664, MS27497	MS27499, MS27504, MS27513	MS27508	MS27474, MS27481
TXR4PCT-2265B-360	22D Pin	0.019	0.492	0.424	0.424	0.618	0.618	0.424	0.964	0.844	0.963	0.833	0.824
TXR4PCT-2266B-360	22D Pin	0.019	0.573	0.505	0.505	0.699	0.699	0.505	1.045	0.925	1.044	0.914	0.905
TXR4PCT-2267B-360	22D Pin	0.019	0.443	0.375	0.375	0.569	0.569	0.375	0.915	0.795	0.914	0.784	0.775
TXR4PCT-2268B-360	22D Pin	0.019	0.355	0.865	0.865	1.059	1.059	0.865	1.405	1.285	1.404	1.274	1.265
TXR4PCT-2269B-360	22D Pin	0.019	0.315	0.158	0.158	0.352	0.352	0.158	0.698	0.578	0.697	0.567	0.558
TXR4PCT-2270B-360	22D Pin	0.019	0.1	0.166	0.166	0.36	0.36	0.166	0.706	0.586	0.705	0.575	0.566
TXR4PCT-2271B-360	22D Pin	0.019	0.285	0.283	0.283	0.477	0.477	0.283	0.823	0.703	0.822	0.692	0.683
TXR4PCT-2272B-360	22D Pin	0.019	0.598	0.463	0.463	0.657	0.657	0.463	1.003	0.883	1.002	0.872	0.863
TXR4PCT-2273B-360	22D Pin	0.019	0.125	NONE	NONE	0.072	0.072	NONE	NONE	NONE	0.417	0.287	NONE
TXR4PCT-2274B-360	22D Pin	0.019	0.446	0.293	0.293	0.487	0.487	0.293	0.833	0.713	0.832	0.702	0.693
TXR4PCT-2275B-360	22D Pin	0.019	0.465	0.308	0.308	0.502	0.502	0.308	0.848	0.728	0.847	0.717	0.708
TXR4PCT-2276B-360	22D Pin	0.019	0.438	0.553	0.553	0.747	0.747	0.553	1.093	0.973	1.092	0.962	0.953
TXR4PCT-2277B-360	22D Pin	0.019	0.745	1.216	1.216	1.41	1.41	1.216	1.756	1.636	1.755	1.625	1.616
TXR4PCT-2278B-360	22D Pin	0.019	0.426	0.269	0.269	0.463	0.463	0.269	0.809	0.689	0.808	0.678	0.669
TXR4PCT-2279B-360	22D Pin	0.019	0.391	0.322	0.322	0.516	0.516	0.322	0.862	0.742	0.861	0.731	0.722
TXR4PCT-2281B-360	22D Pin	0.019	0.208	0.209	0.209	0.403	0.403	0.209	0.749	0.629	0.748	0.618	0.609
TXR4PCT-2282B-360	22D Pin	0.019	0.157	0.48	0.48	0.674	0.674	0.48	1.02	0.9	1.019	0.889	0.88
TXR4PCT-2283B-360	22D Pin	0.019	0.187	0.118	0.118	0.312	0.312	0.118	0.658	0.538	0.657	0.527	0.518
TXR4PCT-2284B-360	22D Pin	0.019	0.316	0.124	0.124	0.318	0.318	0.124	0.664	0.544	0.663	0.533	0.524
TXR4PCT-2285B-360	22D Pin	0.019	0.194	0.374	0.374	0.568	0.568	0.374	0.914	0.794	0.913	0.783	0.774
TXR4PCT-2286B-360	22D Pin	0.019	0.192	0.403	0.403	0.597	0.597	0.403	0.943	0.823	0.942	0.812	0.803
TXR4PCT-2287B-360	22D Pin	0.019	0.42	0.351	0.351	0.545	0.545	0.351	0.891	0.771	0.89	0.76	0.751
TXR4PCT-2288B-360	22D Pin	0.019	0.122	NONE	NONE	0.149	0.149	NONE	NONE	NONE	0.494	0.364	NONE
TXR4PCT-2289B-360	22D Pin	0.019	0.25	0.568	0.568	0.762	0.762	0.568	1.108	0.988	1.107	0.977	0.968
TXR4PCT-2290B-360	22D Pin	0.019	0.223	0.056	0.056	0.25	0.25	0.056	0.596	0.476	0.595	0.465	0.456
TXR4PCT-2291B-360	22D Pin	0.019	0.294	NONE	NONE	0.132	0.132	NONE	NONE	NONE	0.477	0.347	NONE
TXR4PCT-2292B-360	22D Pin	0.019	0.394	0.038	0.038	0.232	0.232	0.038	0.578	0.458	0.577	0.447	0.438
TXR4PCT-2293B-360	22D Pin	0.019	0.1	0.168	0.168	0.362	0.362	0.168	0.708	0.588	0.707	0.577	0.568
TXR4PCT-2294B-360	22D Pin	0.019	0.43	0.358	0.358	0.552	0.552	0.358	0.898	0.778	0.897	0.767	0.758
TXR4PCT-2295B-360	22D Pin	0.019	0.227	0.225	0.225	0.419	0.419	0.225	0.765	0.645	0.764	0.634	0.625
TXR4PCT-2296B-360	22D Pin	0.019	0.295	NONE	NONE	0.197	0.197	NONE	NONE	NONE	0.542	0.412	NONE
TXR4PCT-2297B-360	22D Pin	0.019	0.512	0.443	0.443	0.637	0.637	0.443	0.983	0.863	0.982	0.852	0.843
TXR4PCT-2298B-360	22D Pin	0.019	0.284	0.212	0.212	0.406	0.406	0.212	0.752	0.632	0.751	0.621	0.612
TXR4PCT-2299B-360	22D Pin	0.019	0.342	0.341	0.341	0.535	0.535	0.341	0.881	0.761	0.88	0.75	0.741
TXR4PCT-2200-361	22M Pin	0.02	0.45	0.223	0.223	0.417	0.417	0.223	0.763	0.643	0.762	0.632	0.623
TXR4PCT-2201-361	22M Pin	0.022	0.187	0.32	0.32	0.514	0.514	0.32	0.86	0.74	0.859	0.729	0.72
TXR3PCT-2202-361	22M Pin	0.019	0.562	0.526	0.526	0.72	0.72	0.526	1.066	0.946	1.065	0.935	0.926
TXR4PCT-2202-361	22M Pin	0.019	0.562	0.526	0.526	0.72	0.72	0.526	1.066	0.946	1.065	0.935	0.926
TXR1PCT-2203-361	22M Pin	0.019	0.378	0.232	0.232	0.426	0.426	0.232	0.772	0.652	0.771	0.641	0.632
TXR3PCT-2203-361	22M Pin	0.019	0.378	0.232	0.232	0.426	0.426	0.232	0.772	0.652	0.771	0.641	0.632
TXR4PCT-2203-361	22M Pin	0.019	0.378	0.232	0.232	0.426	0.426	0.232	0.772	0.652	0.771	0.641	0.632
TXR4PCT-2204-361	22M Pin	0.019	0.305	0.925	0.925	1.119	1.119	0.925	1.465	1.345	1.464	1.334	1.325
TXR4PCT-2205-361	22M Pin	0.019	0.305	0.063	0.063	0.257	0.257	0.063	0.603	0.483	0.602	0.472	0.463
TXR1PCT-2206-361	22M Pin	0.019	0.489	0.344	0.344	0.538	0.538	0.344	0.884	0.764	0.883	0.753	0.744
TXR3PCT-2206-361	22M Pin	0.019	0.489	0.344	0.344	0.538	0.538	0.344	0.884	0.764	0.883	0.753	0.744
TXR4PCT-2206-361	22M Pin	0.019	0.489	0.344	0.344	0.538	0.538	0.344	0.884	0.764	0.883	0.753	0.744
TXR3PCT-2207-361	22M Pin	0.019	0.764	0.695	0.695	0.889	0.889	0.695	1.235	1.115	1.234	1.104	1.095
TXR4PCT-2207-361	22M Pin	0.019	0.764	0.695	0.695	0.889	0.889	0.695	1.235	1.115	1.234	1.104	1.095
TXR4PCT-2208-361	22M Pin	0.019	0.2	0.073	0.073	0.267	0.267	0.073	0.613	0.493	0.612	0.482	0.473
TXR4PCT-2209-361	22M Pin	0.025	0.393	0.038	0.038	0.232	0.232	0.038	0.578	0.458	0.577	0.447	0.438
TXR4PCT-2210-361	22M Pin	0.019	0.154	NONE	NONE	0.062	0.062	NONE	NONE	NONE	0.407	0.277	NONE
TXR3PCT-2211-361	22M Pin	0.019	0.3	0.104	0.104	0.298	0.298	0.104	0.644	0.524	0.643	0.513	0.504
TXR4PCT-2211-361	22M Pin	0.019	0.3	0.104	0.104	0.298	0.298	0.104	0.644	0.524	0.643	0.513	0.504
TXR4PCT-2212-361	22M Pin	0.02	0.352	0.157	0.157	0.351	0.351	0.157	0.697	0.577	0.696	0.566	0.557

Milnec Part Number M30929 Derivative	Contact Size & Type	PCB Tail		CONTACT EXTENSION FROM AMPHENOL REAR ±.003					CONTACT EXTENSION FROM FLANGE ±.003				
		O.D.	Length	MS27472, MS27479	MS27664, MS27497	MS27499, MS27504, MS27513	MS27508	MS27474, MS27481	MS27472, MS27479	MS27664, MS27497	MS27499, MS27504, MS27513	MS27508	MS27474, MS27481
		±.001	±.001										
TXR4PCT-2213-361	22M Pin	0.019	0.444	0.293	0.293	0.487	0.487	0.293	0.833	0.713	0.832	0.702	0.693
TXR4PCT-2255-361	22M Pin	0.019	0.216	0.154	0.154	0.348	0.348	0.154	0.694	0.574	0.693	0.563	0.554
TXR4PCT-2256-361	22M Pin	0.019	0.161	NONE	NONE	0.208	0.208	NONE	NONE	NONE	0.553	0.423	NONE
TXR4PCT-2257-361	22M Pin	0.019	0.148	NONE	NONE	0.126	0.126	NONE	NONE	NONE	0.471	0.341	NONE
TXR4PCT-2258-361	22M Pin	0.019	0.283	NONE	NONE	0.064	0.064	NONE	NONE	NONE	0.409	0.279	NONE
TXR4PCT-2259-361	22M Pin	0.019	0.564	0.495	0.495	0.689	0.689	0.495	1.035	0.915	1.034	0.904	0.895
TXR4PCT-2260-361	22M Pin	0.029	0.28	0.259	0.259	0.453	0.453	0.259	0.799	0.679	0.798	0.668	0.659
TXR4PCT-2261-361	22M Pin	0.019	0.152	NONE	NONE	0.172	0.172	NONE	NONE	NONE	0.517	0.387	NONE
TXR4PCT-2262-361	22M Pin	0.019	0.25	NONE	NONE	0.195	0.195	NONE	NONE	NONE	0.54	0.41	NONE
TXR4PCT-2263-361	22M Pin	0.019	0.235	0.165	0.165	0.359	0.359	0.165	0.705	0.585	0.704	0.574	0.565
TXR4PCT-2264-361	22M Pin	0.019	0.268	0.416	0.416	0.61	0.61	0.416	0.956	0.836	0.955	0.825	0.816
TXR4PCT-2265-361	22M Pin	0.019	0.29	0.041	0.041	0.235	0.235	0.041	0.581	0.461	0.58	0.45	0.441
TXR3PCT-2266-361	22M Pin	0.019	0.631	0.478	0.478	0.672	0.672	0.478	1.018	0.898	1.017	0.887	0.878
TXR4PCT-2267-361	22M Pin	0.019	0.188	0.258	0.258	0.452	0.452	0.258	0.798	0.678	0.797	0.667	0.658
TXR4PCT-2268-361	22M Pin	0.019	0.33	0.261	0.261	0.455	0.455	0.261	0.801	0.681	0.8	0.67	0.661
TXR4PCT-2269-361	22M Pin	0.019	0.223	NONE	NONE	0.175	0.175	NONE	NONE	NONE	0.52	0.39	NONE
TXR4PCT-2000-363	20 Pin	0.025	0.297	0.234	0.234	0.428	0.428	0.234	0.774	0.654	0.773	0.643	0.634
TXR4PCT-2001-363	20 Pin	0.026	0.2	0.319	0.319	0.513	0.513	0.319	0.859	0.739	0.858	0.728	0.719
TXR1PCT-2002-363	20 Pin	0.019	0.432	0.351	0.351	0.545	0.545	0.351	0.891	0.771	0.89	0.76	0.751
TXR4PCT-2002-363	20 Pin	0.019	0.435	0.351	0.351	0.545	0.545	0.351	0.891	0.771	0.89	0.76	0.751
TXR4PCT-2003-363	20 Pin	0.019	0.136	0.146	0.146	0.34	0.34	0.146	0.686	0.566	0.685	0.555	0.546
TXR4PCT-2004-363	20 Pin	0.02	0.25	0.293	0.293	0.487	0.487	0.293	0.833	0.713	0.832	0.702	0.693
TXR4PCT-2005-363	20 Pin	0.019	0.225	NONE	NONE	0.147	0.147	NONE	NONE	NONE	0.492	0.362	NONE
TXR4PCT-2006-363	20 Pin	0.019	0.3	0.216	0.216	0.41	0.41	0.216	0.756	0.636	0.755	0.625	0.616
TXR4PCT-2007-363	20 Pin	0.025	0.377	0.152	0.152	0.346	0.346	0.152	0.692	0.572	0.691	0.561	0.552
TXR4PCT-2008-363	20 Pin	0.025	0.343	0.063	0.063	0.257	0.257	0.063	0.603	0.483	0.602	0.472	0.463
TXR4PCT-2009-363	20 Pin	0.025	0.401	0.154	0.154	0.348	0.348	0.154	0.694	0.574	0.693	0.563	0.554
TXR3PCT-2010-363	20 Pin	0.019	0.085	0.223	0.223	0.417	0.417	0.223	0.763	0.643	0.762	0.632	0.623
TXR1PCT-2011-363	20 Pin	0.019	0.406	0.225	0.225	0.419	0.419	0.225	0.765	0.645	0.764	0.634	0.625
TXR1PCT-2012-363	20 Pin	0.019	0.41	0.141	0.141	0.335	0.335	0.141	0.681	0.561	0.68	0.55	0.541
TXR4PCT-2013-363	20 Pin	0.019	0.335	0.063	0.063	0.257	0.257	0.063	0.603	0.483	0.602	0.472	0.463
TXR4PCT-2014-363	20 Pin	0.019	0.135	NONE	NONE	0.057	0.057	NONE	NONE	NONE	0.402	0.272	NONE
TXR4PCT-2015-363	20 Pin	0.019	0.934	0.662	0.662	0.856	0.856	0.662	1.202	1.082	1.201	1.071	1.062
TXR4PCT-2016-363	20 Pin	0.019	0.2	0.073	0.073	0.267	0.267	0.073	0.613	0.493	0.612	0.482	0.473
TXR4PCT-2017-363	20 Pin	0.019	0.481	0.216	0.216	0.41	0.41	0.216	0.756	0.636	0.755	0.625	0.616
TXR4PCT-2018-363	20 Pin	0.019	0.342	0.258	0.258	0.452	0.452	0.258	0.798	0.678	0.797	0.667	0.658
TXR4PCT-2021-363	20 Pin	0.019	0.25	0.169	0.169	0.363	0.363	0.169	0.709	0.589	0.708	0.578	0.569
TXR4PCT-2022-363	20 Pin	0.019	0.25	0.293	0.293	0.487	0.487	0.293	0.833	0.713	0.832	0.702	0.693
TXR4PCT-2023-363	20 Pin	0.019	0.09	0.156	0.156	0.35	0.35	0.156	0.696	0.576	0.695	0.565	0.556
TXR4PCT-2024-363	20 Pin	0.019	0.327	0.243	0.243	0.437	0.437	0.243	0.783	0.663	0.782	0.652	0.643
TXR4PCT-2025-363	20 Pin	0.019	0.712	0.628	0.628	0.822	0.822	0.628	1.168	1.048	1.167	1.037	1.028
TXR4PCT-2026-363	20 Pin	0.019	0.24	0.351	0.351	0.545	0.545	0.351	0.891	0.771	0.89	0.76	0.751
TXR4PCT-2027-363	20 Pin	0.019	0.33	0.261	0.261	0.455	0.455	0.261	0.801	0.681	0.8	0.67	0.661
TXR4PCT-2028-363	20 Pin	0.019	0.274	0.1	0.1	0.294	0.294	0.1	0.64	0.52	0.639	0.509	0.5
TXR4PCT-2029-363	20 Pin	0.019	0.42	0.351	0.351	0.545	0.545	0.351	0.891	0.771	0.89	0.76	0.751
TXR4PCT-2030-363	20 Pin	0.04	0.275	0.447	0.447	0.641	0.641	0.447	0.987	0.867	0.986	0.856	0.847
TXR4PCT-2031-363	20 Pin	0.025	0.551	0.351	0.351	0.545	0.545	0.351	0.891	0.771	0.89	0.76	0.751
TXR4PCT-2032-363	20 Pin	0.023	0.276	0.412	0.412	0.606	0.606	0.412	0.952	0.832	0.951	0.821	0.812
TXR4PCT-2033-363	20 Pin	0.025	0.16	0.144	0.144	0.338	0.338	0.144	0.684	0.564	0.683	0.553	0.544
TXR4PCT-2034-363	20 Pin	0.025	0.195	0.179	0.179	0.373	0.373	0.179	0.719	0.599	0.718	0.588	0.579
TXR4PCT-2035-363	20 Pin	0.025	0.317	0.263	0.263	0.457	0.457	0.263	0.803	0.683	0.802	0.672	0.663
TXR3PCT-2036-363	20 Pin	0.019	0.638	0.559	0.559	0.753	0.753	0.559	1.099	0.979	1.098	0.968	0.959
TXR4PCT-2237-363	20 Pin	0.019	0.378	0.229	0.229	0.423	0.423	0.229	0.769	0.649	0.768	0.638	0.629
TXR4PCT-2038-363	20 Pin	0.019	0.502	0.345	0.345	0.539	0.539	0.345	0.885	0.765	0.884	0.754	0.745

Milnec Part Number M30929 Derivative	Contact Size & Type	PCB Tail		CONTACT EXTENSION FROM AMPHENOL REAR ±.003					CONTACT EXTENSION FROM FLANGE ±.003				
		O.D. ±.001	Length ±.001	MS27472, MS27479	MS27664, MS27497	MS27499, MS27504, MS27513	MS27508	MS27474, MS27481	MS27472, MS27479	MS27664, MS27497	MS27499, MS27504, MS27513	MS27508	MS27474, MS27481
TXR4PCT-2039-363	20 Pin	0.03	0.136	0.146	0.146	0.34	0.34	0.146	0.686	0.566	0.685	0.555	0.546
TXR4PCT-2040-363	20 Pin	0.019	0.635	0.558	0.558	0.752	0.752	0.558	1.098	0.978	1.097	0.967	0.958
TXR4PCT-2041-363	20 Pin	0.019	0.153	0.371	0.371	0.565	0.565	0.371	0.911	0.791	0.91	0.78	0.771
TXR4PCT-2042-363	20 Pin	0.019	0.927	0.864	0.864	1.058	1.058	0.864	1.404	1.284	1.403	1.273	1.264
TXR4PCT-2043-363	20 Pin	0.028	0.12	0.299	0.299	0.493	0.493	0.299	0.839	0.719	0.838	0.708	0.699
TXR4PCT-2044-363	20 Pin	0.019	0.299	0.118	0.118	0.312	0.312	0.118	0.658	0.538	0.657	0.527	0.518
TXR4PCT-2045-363	20 Pin	0.019	0.43	0.227	0.227	0.421	0.421	0.227	0.767	0.647	0.766	0.636	0.627
TXR4PCT-2046-363	20 Pin	0.019	0.253	NONE	NONE	0.175	0.175	NONE	NONE	NONE	0.52	0.39	NONE
TXR4PCT-2047-363	20 Pin	0.019	0.397	0.213	0.213	0.407	0.407	0.213	0.753	0.633	0.752	0.622	0.613
TXR4PCT-2048-363	20 Pin	0.019	0.377	0.293	0.293	0.487	0.487	0.293	0.833	0.713	0.832	0.702	0.693
TXR4PCT-2049-363	20 Pin	0.019	0.351	0.273	0.273	0.467	0.467	0.273	0.813	0.693	0.812	0.682	0.673
TXR3PCT-2050-363	20 Pin	0.025	0.948	0.723	0.723	0.917	0.917	0.723	1.263	1.143	1.262	1.132	1.123
TXR3PCT-2051-363	20 Pin	0.025	0.893	0.697	0.697	0.891	0.891	0.697	1.237	1.117	1.236	1.106	1.097
TXR3PCT-2052-363	20 Pin	0.032	0.893	0.697	0.697	0.891	0.891	0.697	1.237	1.117	1.236	1.106	1.097
TXR4PCT-2053-363	20 Pin	0.019	0.487	0.403	0.403	0.597	0.597	0.403	0.943	0.823	0.942	0.812	0.803
TXR4PCT-2054-363	20 Pin	0.019	0.422	0.15	0.15	0.344	0.344	0.15	0.69	0.57	0.689	0.559	0.55
TXR4PCT-2055-363	20 Pin	0.019	0.25	0.428	0.428	0.622	0.622	0.428	0.968	0.848	0.967	0.837	0.828
TXR4PCT-2056-363	20 Pin	0.019	0.275	NONE	NONE	0.222	0.222	NONE	NONE	NONE	0.567	0.437	NONE
TXR4PCT-2057-363	20 Pin	0.019	0.269	0.185	0.185	0.379	0.379	0.185	0.725	0.605	0.724	0.594	0.585
TXR4PCT-2058-363	20 Pin	0.019	0.242	NONE	NONE	0.187	0.187	NONE	NONE	NONE	0.532	0.402	NONE
TXR4PCT-2059-363	20 Pin	0.019	0.444	0.375	0.375	0.569	0.569	0.375	0.915	0.795	0.914	0.784	0.775
TXR3PCT-2060-363	20 Pin	0.025	0.118	0.185	0.185	0.379	0.379	0.185	0.725	0.605	0.724	0.594	0.585
TXR4PCT-2061-363	20 Pin	0.025	0.138	0.205	0.205	0.399	0.399	0.205	0.745	0.625	0.744	0.614	0.605
TXR4PCT-2062-363	20 Pin	0.025	0.157	0.224	0.224	0.418	0.418	0.224	0.764	0.644	0.763	0.633	0.624
TXR4PCT-2063-363	20 Pin	0.025	0.177	0.244	0.244	0.438	0.438	0.244	0.784	0.664	0.783	0.653	0.644
TXR4PCT-2064-363	20 Pin	0.025	0.197	0.264	0.264	0.458	0.458	0.264	0.804	0.684	0.803	0.673	0.664
TXR4PCT-2065-363	20 Pin	0.025	0.217	0.284	0.284	0.478	0.478	0.284	0.824	0.704	0.823	0.693	0.684
TXR4PCT-2066-363	20 Pin	0.025	0.236	0.303	0.303	0.497	0.497	0.303	0.843	0.723	0.842	0.712	0.703
TXR4PCT-2067-363	20 Pin	0.025	0.118	0.218	0.218	0.412	0.412	0.218	0.758	0.638	0.757	0.627	0.618
TXR4PCT-2068-363	20 Pin	0.025	0.138	0.238	0.238	0.432	0.432	0.238	0.778	0.658	0.777	0.647	0.638
TXR4PCT-2069-363	20 Pin	0.025	0.157	0.257	0.257	0.451	0.451	0.257	0.797	0.677	0.796	0.666	0.657
TXR4PCT-2070-363	20 Pin	0.025	0.177	0.277	0.277	0.471	0.471	0.277	0.817	0.697	0.816	0.686	0.677
TXR4PCT-2071-363	20 Pin	0.025	0.197	0.297	0.297	0.491	0.491	0.297	0.837	0.717	0.836	0.706	0.697
TXR4PCT-2072-363	20 Pin	0.025	0.217	0.317	0.317	0.511	0.511	0.317	0.857	0.737	0.856	0.726	0.717
TXR4PCT-2073-363	20 Pin	0.025	0.236	0.336	0.336	0.53	0.53	0.336	0.876	0.756	0.875	0.745	0.736
TXR4PCT-2074-363	20 Pin	0.03	0.769	0.614	0.614	0.808	0.808	0.614	1.154	1.034	1.153	1.023	1.014
TXR4PCT-2075-363	20 Pin	0.039	0.28	0.259	0.259	0.453	0.453	0.259	0.799	0.679	0.798	0.668	0.659
TXR4PCT-2076-363	20 Pin	0.026	0.384	0.431	0.431	0.625	0.625	0.431	0.971	0.851	0.97	0.84	0.831
TXR4PCT-2077-363	20 Pin	0.019	0.642	0.558	0.558	0.752	0.752	0.558	1.098	0.978	1.097	0.967	0.958
TXR4PCT-2078-363	20 Pin	0.019	0.3	0.216	0.216	0.41	0.41	0.216	0.756	0.636	0.755	0.625	0.616
TXR4PCT-2079-363	20 Pin	0.019	0.435	0.351	0.351	0.545	0.545	0.351	0.891	0.771	0.89	0.76	0.751
TXR4PCT-2080-363	20 Pin	0.025	0.237	NONE	NONE	0.185	0.185	NONE	NONE	NONE	0.53	0.4	NONE
TXR4PCT-2081-363	20 Pin	0.025	0.242	0.181	0.181	0.375	0.375	0.181	0.721	0.601	0.72	0.59	0.581
TXR4PCT-2082-363	20 Pin	0.025	0.383	0.111	0.111	0.305	0.305	0.111	0.651	0.531	0.65	0.52	0.511
TXR4PCT-2083-363	20 Pin	0.025	0.566	0.506	0.506	0.7	0.7	0.506	1.046	0.926	1.045	0.915	0.906
TXR4PCT-2084-363	20 Pin	0.025	0.945	0.723	0.723	0.917	0.917	0.723	1.263	1.143	1.262	1.132	1.123
TXR4PCT-2085-363	20 Pin	0.025	0.762	0.616	0.616	0.81	0.81	0.616	1.156	1.036	1.155	1.025	1.016
TXR4PCT-2086-363	20 Pin	0.025	0.32	0.178	0.178	0.372	0.372	0.178	0.718	0.598	0.717	0.587	0.578
TXR4PCT-2087-363	20 Pin	0.019	0.259	NONE	NONE	0.204	0.204	NONE	NONE	NONE	0.549	0.419	NONE
TXR4PCT-2088-363	20 Pin	0.019	0.233	0.092	0.092	0.286	0.286	0.092	0.632	0.512	0.631	0.501	0.492
TXR4PCT-2089-363	20 Pin	0.019	0.438	0.166	0.166	0.36	0.36	0.166	0.706	0.586	0.705	0.575	0.566
TXR4PCT-2090-363	20 Pin	0.019	0.213	0.219	0.219	0.413	0.413	0.219	0.759	0.639	0.758	0.628	0.619
TXR4PCT-2091-363	20 Pin	0.025	0.15	0.218	0.218	0.412	0.412	0.218	0.758	0.638	0.757	0.627	0.618
TXR3PCT-2092-363	20 Pin	0.025	0.49	0.418	0.418	0.612	0.612	0.418	0.958	0.838	0.957	0.827	0.818

Milnec Part Number M30929 Derivative	Contact Size & Type	PCB Tail		CONTACT EXTENSION FROM AMPHENOL REAR ±.003					CONTACT EXTENSION FROM FLANGE ±.003				
		O.D. ±.001	Length ±.001	MS27472, MS27479	MS27664, MS27497	MS27499, MS27504, MS27513	MS27508	MS27474, MS27481	MS27472, MS27479	MS27664, MS27497	MS27499, MS27504, MS27513	MS27508	MS27474, MS27481
TXR4PCT-2093-363	20 Pin	0.034	0.49	0.154	0.154	0.348	0.348	0.154	0.694	0.574	0.693	0.563	0.554
TXR4PCT-2094-363	20 Pin	0.019	0.285	0.267	0.267	0.461	0.461	0.267	0.807	0.687	0.806	0.676	0.667
TXR4PCT-2095-363	20 Pin	0.019	0.225	0.141	0.141	0.335	0.335	0.141	0.681	0.561	0.68	0.55	0.541
TXR4PCT-2096-363	20 Pin	0.019	0.512	0.443	0.443	0.637	0.637	0.443	0.983	0.863	0.982	0.852	0.843
TXR4PCT-2097-363	20 Pin	0.019	0.559	0.49	0.49	0.684	0.684	0.49	1.03	0.91	1.029	0.899	0.89
TXR4PCT-2098-363	20 Pin	0.019	0.542	0.458	0.458	0.652	0.652	0.458	0.998	0.878	0.997	0.867	0.858
TXR4PCT-2099-363	20 Pin	0.019	0.415	0.258	0.258	0.452	0.452	0.258	0.798	0.678	0.797	0.667	0.658
TXR4PCT-2002E-363	20 Pin	0.019	0.09	0.168	0.168	0.362	0.362	0.168	0.708	0.588	0.707	0.577	0.568
TXR4PCT-2003E-363	20 Pin	0.019	0.115	0.168	0.168	0.362	0.362	0.168	0.708	0.588	0.707	0.577	0.568
TXR4PCT-2004E-363	20 Pin	0.019	0.261	0.115	0.115	0.309	0.309	0.115	0.655	0.535	0.654	0.524	0.515
TXR4PCT-2005E-363	20 Pin	0.019	0.285	0.303	0.303	0.497	0.497	0.303	0.843	0.723	0.842	0.712	0.703
TXR4PCT-2006E-363	20 Pin	0.019	0.271	0.319	0.319	0.513	0.513	0.319	0.859	0.739	0.858	0.728	0.719
TXR4PCT-2007E-363	20 Pin	0.019	0.545	0.293	0.293	0.487	0.487	0.293	0.833	0.713	0.832	0.702	0.693
TXR4PCT-2008E-363	20 Pin	0.019	0.295	0.473	0.473	0.667	0.667	0.473	1.013	0.893	1.012	0.882	0.873
TXR4PCT-2010E-363	20 Pin	0.019	0.22	0.428	0.428	0.622	0.622	0.428	0.968	0.848	0.967	0.837	0.828
TXR4PCT-2011E-363	20 Pin	0.019	0.095	0.638	0.638	0.832	0.832	0.638	1.178	1.058	1.177	1.047	1.038
TXR4PCT-2012E-363	20 Pin	0.019	0.333	0.081	0.081	0.275	0.275	0.081	0.621	0.501	0.62	0.49	0.481
TXR4PCT-2013E-363	20 Pin	0.04	0.25	0.047	0.467	0.661	0.661	0.467	0.587	0.887	1.006	0.876	0.867
TXR4PCT-1600-364	16 Pin	0.062	0.548	0.352	0.352	0.546	0.546	0.352	0.892	0.772	0.891	0.761	0.752
TXR4PCT-1601-364	16 Pin	0.062	0.342	0.341	0.341	0.535	0.535	0.341	0.881	0.761	0.88	0.75	0.741
TXR4PCT-1602-364	16 Pin	0.062	0.307	0.063	0.063	0.257	0.257	0.063	0.603	0.483	0.602	0.472	0.463
TXR4PCT-1603-364	16 Pin	0.048	0.547	0.351	0.351	0.545	0.545	0.351	0.891	0.771	0.89	0.76	0.751
TXR4PCT-1604-364	16 Pin	0.062	0.387	0.113	0.113	0.307	0.307	0.113	0.653	0.533	0.652	0.522	0.513
TXR4PCT-1605-364	16 Pin	0.057	0.118	0.362	0.362	0.556	0.556	0.362	0.902	0.782	0.901	0.771	0.762
TXR4PCT-1606-364	16 Pin	0.05	0.17	0.283	0.283	0.477	0.477	0.283	0.823	0.703	0.822	0.692	0.683
TXR4PCT-1607-364	16 Pin	0.062	0.752	0.607	0.607	0.801	0.801	0.607	1.147	1.027	1.146	1.016	1.007
TXR4PCT-1608-364	16 Pin	0.062	0.09	0.156	0.156	0.35	0.35	0.156	0.696	0.576	0.695	0.565	0.556
TXR4PCT-1609-364	16 Pin	0.062	0.548	0.451	0.451	0.645	0.645	0.451	0.991	0.871	0.99	0.86	0.851
TXR4PCT-1610-364	16 Pin	0.025	0.436	0.352	0.352	0.546	0.546	0.352	0.892	0.772	0.891	0.761	0.752
TXR4PCT-1611-364	16 Pin	0.025	0.165	0.144	0.144	0.338	0.338	0.144	0.684	0.564	0.683	0.553	0.544
TXR4PCT-1612-364	16 Pin	0.025	0.2	0.179	0.179	0.373	0.373	0.179	0.719	0.599	0.718	0.588	0.579
TXR4PCT-1613-364	16 Pin	0.025	0.238	0.217	0.217	0.411	0.411	0.217	0.757	0.637	0.756	0.626	0.617
TXR4PCT-1614-364	16 Pin	0.062	0.225	NONE	NONE	0.147	0.147	NONE	NONE	NONE	0.492	0.362	NONE
TXR4PCT-1615-364	16 Pin	0.062	0.254	NONE	NONE	0.204	0.204	NONE	NONE	NONE	0.549	0.419	NONE
TXR4PCT-1618-364	16 Pin	0.025	0.085	0.223	0.223	0.417	0.417	0.223	0.763	0.643	0.762	0.632	0.623
TXR4PCT-1620-364	16 Pin	0.04	0.548	0.259	0.259	0.453	0.453	0.259	0.799	0.679	0.798	0.668	0.659
TXR4PCT-1621-364	16 Pin	0.04	0.629	0.34	0.34	0.534	0.534	0.34	0.88	0.76	0.879	0.749	0.74
TXR4PCT-1630-364	16 Pin	0.035	0.135	NONE	NONE	0.15	0.15	NONE	NONE	NONE	0.495	0.365	NONE
TXR4PCT-1640-364	16 Pin	0.062	0.118	0.185	0.185	0.379	0.379	0.185	0.725	0.605	0.724	0.594	0.585
TXR4PCT-1641-364	16 Pin	0.062	0.138	0.205	0.205	0.399	0.399	0.205	0.745	0.625	0.744	0.614	0.605
TXR4PCT-1642-364	16 Pin	0.062	0.157	0.224	0.224	0.418	0.418	0.224	0.764	0.644	0.763	0.633	0.624
TXR4PCT-1643-364	16 Pin	0.062	0.177	0.244	0.244	0.438	0.438	0.244	0.784	0.664	0.783	0.653	0.644
TXR4PCT-1644-364	16 Pin	0.062	0.197	0.264	0.264	0.458	0.458	0.264	0.804	0.684	0.803	0.673	0.664
TXR4PCT-1645-364	16 Pin	0.062	0.217	0.284	0.284	0.478	0.478	0.284	0.824	0.704	0.823	0.693	0.684
TXR4PCT-1646-364	16 Pin	0.062	0.236	0.303	0.303	0.497	0.497	0.303	0.843	0.723	0.842	0.712	0.703
TXR4PCT-1647-364	16 Pin	0.062	0.118	0.218	0.218	0.412	0.412	0.218	0.758	0.638	0.757	0.627	0.618
TXR4PCT-1648-364	16 Pin	0.062	0.138	0.238	0.238	0.432	0.432	0.238	0.778	0.658	0.777	0.647	0.638
TXR4PCT-1649-364	16 Pin	0.062	0.157	0.257	0.257	0.451	0.451	0.257	0.797	0.677	0.796	0.666	0.657
TXR4PCT-1650-364	16 Pin	0.062	0.177	0.277	0.277	0.471	0.471	0.277	0.817	0.697	0.816	0.686	0.677
TXR4PCT-1651-364	16 Pin	0.062	0.197	0.297	0.297	0.491	0.491	0.297	0.837	0.717	0.836	0.706	0.697
TXR4PCT-1652-364	16 Pin	0.062	0.217	0.317	0.317	0.511	0.511	0.317	0.857	0.737	0.856	0.726	0.717
TXR4PCT-1653-364	16 Pin	0.062	0.236	0.336	0.336	0.53	0.53	0.336	0.876	0.756	0.875	0.745	0.736
TXR4PCT-1654-364	16 Pin	0.048	0.893	0.697	0.697	0.891	0.891	0.697	1.237	1.117	1.236	1.106	1.097
TXR4PCT-1655-364	16 Pin	0.06	0.769	0.614	0.614	0.808	0.808	0.614	1.154	1.034	1.153	1.023	1.014

Milnec Part Number M30929 Derivative	Contact Size & Type	PCB Tail		CONTACT EXTENSION FROM AMPHENOL REAR ±.003					CONTACT EXTENSION FROM FLANGE ±.003				
		O.D. ±.001	Length ±.001	MS27472, MS27479	MS27664, MS27497	MS27499, MS27504, MS27513	MS27508	MS27474, MS27481	MS27472, MS27479	MS27664, MS27497	MS27499, MS27504, MS27513	MS27508	MS27474, MS27481
TXR4PCT-1656-364	16 Pin	0.062	0.301	0.229	0.229	0.423	0.423	0.229	0.769	0.649	0.768	0.638	0.629
TXR4PCT-1657-364	16 Pin	0.062	0.434	0.266	0.266	0.46	0.46	0.266	0.806	0.686	0.805	0.675	0.666
TXR4PCT-1658-364	16 Pin	0.039	0.12	0.299	0.299	0.493	0.493	0.299	0.839	0.719	0.838	0.708	0.699
TXR4PCT-1659-364	16 Pin	0.062	0.28	0.281	0.281	0.475	0.475	0.281	0.821	0.701	0.82	0.69	0.681
TXR4PCT-1660-364	16 Pin	0.062	0.213	0.219	0.219	0.413	0.413	0.219	0.759	0.639	0.758	0.628	0.619
TXR4PCT-1661-364	16 Pin	0.062	0.413	0.225	0.225	0.419	0.419	0.225	0.765	0.645	0.764	0.634	0.625
TXR4PCT-1662-364	16 Pin	0.062	0.239	0.051	0.051	0.245	0.245	0.051	0.591	0.471	0.59	0.46	0.451
TXR4PCT-1663-364	16 Pin	0.062	0.428	0.239	0.239	0.433	0.433	0.239	0.779	0.659	0.778	0.648	0.639
TXR4PCT-1664-364	16 Pin	0.062	0.179	NONE	NONE	0.177	0.177	NONE	NONE	NONE	0.522	0.392	NONE
TXR4PCT-1665-364	16 Pin	0.062	0.653	0.457	0.457	0.651	0.651	0.457	0.997	0.877	0.996	0.866	0.857
TXR4PCT-1666-364	16 Pin	0.062	0.42	0.351	0.351	0.545	0.545	0.351	0.891	0.771	0.89	0.76	0.751
TXR4PCT-1667-364	16 Pin	0.062	0.33	0.261	0.261	0.455	0.455	0.261	0.801	0.681	0.8	0.67	0.661
TXR4PCT-1668-364	16 Pin	0.062	0.247	0.08	0.08	0.274	0.274	0.08	0.62	0.5	0.619	0.489	0.48
TXR4PCT-1669-364	16 Pin	0.062	0.502	0.345	0.345	0.539	0.539	0.345	0.885	0.765	0.884	0.754	0.745
TXR4PCT-1670-364	16 Pin	0.062	0.635	0.558	0.558	0.752	0.752	0.558	1.098	0.978	1.097	0.967	0.958
TXR4PCT-1671-364	16 Pin	0.062	0.267	0.073	0.073	0.267	0.267	0.073	0.613	0.493	0.612	0.482	0.473
TXR4PCT-1672-364	16 Pin	0.062	0.573	0.505	0.505	0.699	0.699	0.505	1.045	0.925	1.044	0.914	0.9
TXR4PCT-1675-364	16 Pin	0.062	0.315	0.158	0.158	0.352	0.352	0.158	0.698	0.578	0.697	0.567	0.558
TXR4PCT-1676-364	16 Pin	0.062	0.38	0.559	0.559	0.753	0.753	0.559	1.099	0.979	1.098	0.968	0.959
TXR4PCT-1677-364	16 Pin	0.062	0.45	0.293	0.293	0.487	0.487	0.293	0.833	0.713	0.832	0.702	0.693
TXR4PCT-1678-364	16 Pin	0.062	0.322	0.128	0.128	0.322	0.322	0.128	0.668	0.548	0.667	0.537	0.528
TXR4PCT-1679-364	16 Pin	0.062	0.385	NONE	NONE	0.223	0.223	NONE	NONE	NONE	0.568	0.438	NONE
TXR4PCT-1680-364	16 Pin	0.062	0.522	0.376	0.376	0.57	0.57	0.376	0.916	0.796	0.915	0.785	0.776
TXR4PCT-1681-364	16 Pin	0.062	0.395	0.201	0.201	0.395	0.395	0.201	0.741	0.621	0.74	0.61	0.601
TXR4PCT-1682-364	16 Pin	0.062	0.301	0.234	0.234	0.428	0.428	0.234	0.774	0.654	0.773	0.643	0.634
TXR4PCT-1683-364	16 Pin	0.062	0.445	0.251	0.251	0.445	0.445	0.251	0.791	0.671	0.79	0.66	0.651
TXR4PCT-1684-364	16 Pin	0.062	0.852	0.79	0.79	0.984	0.984	0.79	1.33	1.21	1.329	1.199	1.19
TXR4PCT-1685-364	16 Pin	0.062	0.397	0.313	0.313	0.507	0.507	0.313	0.853	0.733	0.852	0.722	0.713
TXR4PCT-1686-364	16 Pin	0.062	0.945	0.723	0.723	0.917	0.917	0.723	1.263	1.143	1.262	1.132	1.123
TXR4PCT-1687-364	16 Pin	0.062	0.813	0.744	0.744	0.938	0.938	0.744	1.284	1.164	1.283	1.153	1.144
TXR4PCT-1688-364	16 Pin	0.062	0.512	0.443	0.443	0.637	0.637	0.443	0.983	0.863	0.982	0.852	0.843
TXR4PCT-1689-364	16 Pin	0.062	0.19	0.209	0.209	0.403	0.403	0.209	0.749	0.629	0.748	0.618	0.609
TXR4PCT-1690-364	16 Pin	0.054	0.138	0.154	0.154	0.348	0.348	0.154	0.694	0.574	0.693	0.563	0.554
TXR4PCT-1691-364	16 Pin	0.04	0.2	0.176	0.176	0.37	0.37	0.176	0.716	0.596	0.715	0.585	0.576
TXR4PCT-1692-364	16 Pin	0.062	0.25	0.467	0.467	0.661	0.661	0.047	1.007	0.887	1.006	0.876	0.447
TXR4PCT-1200-365	12 Pin	0.081	0.643	0.351	0.351	0.545	0.545	0.351	0.891	0.771	0.89	0.76	0.751
TXR4PCT-1201-365	12 Pin	0.081	0.473	0.181	0.181	0.375	0.375	0.181	0.721	0.601	0.72	0.59	0.581
TXR4PCT-1202-365	12 Pin	0.081	0.243	NONE	NONE	0.145	0.145	NONE	NONE	NONE	0.49	0.36	NONE
TXR4PCT-1203-365	12 Pin	0.081	0.523	0.231	0.231	0.425	0.425	0.231	0.771	0.651	0.77	0.64	0.631
TXR4PCT-1204-365	12 Pin	0.081	0.157	0.214	0.214	0.408	0.408	0.214	0.754	0.634	0.753	0.623	0.614
TXR4PCT-1205-365	12 Pin	0.081	0.213	0.338	0.338	0.532	0.532	0.338	0.878	0.758	0.877	0.747	0.738
TXR4PCT-1206-365	12 Pin	0.081	0.244	0.299	0.299	0.493	0.493	0.299	0.839	0.719	0.838	0.708	0.699
TXR4PCT-1207-365	12 Pin	0.081	0.88	0.583	0.583	0.777	0.777	0.583	1.123	1.003	1.122	0.992	0.983
TXR4PCT-1208-365	12 Pin	0.08	0.706	0.46	0.46	0.654	0.654	0.46	1	0.88	0.999	0.869	0.86
TXR4PCT-1210-365	12 Pin	0.081	0.145	0.144	0.144	0.338	0.338	0.144	0.684	0.564	0.683	0.553	0.544
TXR4PCT-1211-365	12 Pin	0.081	0.18	0.179	0.179	0.373	0.373	0.179	0.719	0.599	0.718	0.588	0.579
TXR4PCT-1230-365	12 Pin	0.081	0.3	0.524	0.524	0.718	0.718	0.524	1.064	0.944	1.063	0.933	0.924
TXR4PCT-1231-365	12 Pin	0.081	0.59	0.596	0.596	0.79	0.79	0.596	1.136	1.016	1.135	1.005	0.996
TXR4PCT-1240-365	12 Pin	0.081	0.118	0.185	0.185	0.379	0.379	0.185	0.725	0.605	0.724	0.594	0.585
TXR4PCT-1241-365	12 Pin	0.081	0.138	0.205	0.205	0.399	0.399	0.205	0.745	0.625	0.744	0.614	0.605
TXR4PCT-1242-365	12 Pin	0.081	0.157	0.224	0.224	0.418	0.418	0.224	0.764	0.644	0.763	0.633	0.624
TXR4PCT-1243-365	12 Pin	0.081	0.177	0.244	0.244	0.438	0.438	0.244	0.784	0.664	0.783	0.653	0.644
TXR4PCT-1244-365	12 Pin	0.081	0.197	0.264	0.264	0.458	0.458	0.264	0.804	0.684	0.803	0.673	0.664
TXR4PCT-1245-365	12 Pin	0.081	0.217	0.284	0.284	0.478	0.478	0.284	0.824	0.704	0.823	0.693	0.684

Milnec Part Number M30929 Derivative	Contact Size & Type	PCB Tail		CONTACT EXTENSION FROM AMPHENOL REAR ±.003					CONTACT EXTENSION FROM FLANGE ±.003				
		O.D. ±.001	Length ±.001	MS27472, MS27479	MS27664, MS27497	MS27499, MS27504, MS27513	MS27508	MS27474, MS27481	MS27472, MS27479	MS27664, MS27497	MS27499, MS27504, MS27513	MS27508	MS27474, MS27481
TXR4PCT-1246-365	12 Pin	0.081	0.236	0.303	0.303	0.497	0.497	0.303	0.843	0.723	0.842	0.712	0.703
TXR4PCT-1247-365	12 Pin	0.081	0.118	0.218	0.218	0.412	0.412	0.218	0.758	0.638	0.757	0.627	0.618
TXR4PCT-1248-365	12 Pin	0.081	0.138	0.238	0.238	0.432	0.432	0.238	0.778	0.658	0.777	0.647	0.638
TXR4PCT-1249-365	12 Pin	0.081	0.157	0.257	0.257	0.451	0.451	0.257	0.797	0.677	0.796	0.666	0.657
TXR4PCT-1250-365	12 Pin	0.081	0.177	0.277	0.277	0.471	0.471	0.277	0.817	0.697	0.816	0.686	0.677
TXR4PCT-1251-365	12 Pin	0.081	0.197	0.297	0.297	0.491	0.491	0.297	0.837	0.717	0.836	0.706	0.697
TXR4PCT-1252-365	12 Pin	0.081	0.217	0.317	0.317	0.511	0.511	0.317	0.857	0.737	0.856	0.726	0.717
TXR4PCT-1253-365	12 Pin	0.081	0.236	0.336	0.336	0.53	0.53	0.336	0.876	0.756	0.875	0.745	0.736
TXR4PCT-1254-365	12 Pin	0.094	0.242	0.299	0.299	0.493	0.493	0.299	0.839	0.719	0.838	0.708	0.699
TXR4PCT-1255-365	12 Pin	0.081	0.28	0.531	0.531	0.725	0.725	0.531	1.071	0.951	1.07	0.94	0.931
TXR4PCT-1256-365	12 Pin	0.081	0.265	0.392	0.392	0.586	0.586	0.392	0.932	0.812	0.931	0.801	0.792
TXR4PCT-1257-365	12 Pin	0.081	0.25	0.467	0.467	0.661	0.661	0.467	1.007	0.887	1.006	0.876	0.867
TXR35PCT-2200-354	22D Socket	0.019	0.266	0.101	0.101	0.298	0.298	0.101	0.641	0.518	0.638	0.513	0.495
TXR35PCT-2201-354	22D Socket	0.019	0.26	NONE	NONE	0.199	0.199	NONE	NONE	NONE	0.539	0.414	NONE
TXR35PCT-2202-354	22D Socket	0.019	0.489	0.324	0.324	0.521	0.521	0.324	0.864	0.741	0.861	0.736	0.718
TXR35PCT-2203-354	22D Socket	0.024	0.192	0.109	0.109	0.306	0.306	0.109	0.649	0.526	0.646	0.521	0.503
TXR35PCT-2204-354	22D Socket	0.022	0.233	0.147	0.147	0.344	0.344	0.147	0.687	0.564	0.684	0.559	0.541
TXR35PCT-2205-354	22D Socket	0.02	0.45	0.173	0.173	0.37	0.37	0.173	0.713	0.59	0.71	0.585	0.567
TXR35PCT-2206-354	22D Socket	0.021	0.1	0.102	0.102	0.299	0.299	0.102	0.642	0.519	0.639	0.514	0.496
TXR35PCT-2207-354	22D Socket	0.021	0.357	0.147	0.147	0.344	0.344	0.147	0.687	0.564	0.684	0.559	0.541
TXR35PCT-2208-354	22D Socket	0.021	0.256	0.046	0.046	0.243	0.243	0.046	0.586	0.463	0.583	0.458	0.44
TXR35PCT-2209-354	22D Socket	0.02	0.831	0.698	0.698	0.895	0.895	0.698	1.238	1.115	1.235	1.11	1.092
TXR35PCT-2210-354	22D Socket	0.02	0.402	0.189	0.189	0.386	0.386	0.189	0.729	0.606	0.726	0.601	0.583
TXR35PCT-2212-354	22D Socket	0.029	0.118	0.364	0.364	0.561	0.561	0.364	0.904	0.781	0.901	0.776	0.758
TXR35PCT-2213-354	22D Socket	0.019	0.13	0.038	0.038	0.235	0.235	0.038	0.578	0.455	0.575	0.45	0.432
TXR35PCT-2214-354	22D Socket	0.019	0.546	0.383	0.383	0.58	0.58	0.383	0.923	0.8	0.92	0.795	0.777
TXR35PCT-2215-354	22D Socket	0.019	0.569	0.515	0.515	0.712	0.712	0.515	1.055	0.932	1.052	0.927	0.909
TXR35PCT-2217-354	22D Socket	0.025	0.265	NONE	NONE	0.194	0.194	NONE	NONE	NONE	0.534	0.409	NONE
TXR35PCT-2218-354	22D Socket	0.019	0.233	0.347	0.347	0.544	0.544	0.347	0.887	0.764	0.884	0.759	0.741
TXR35PCT-2219-354	22D Socket	0.019	0.362	0.289	0.289	0.486	0.486	0.289	0.829	0.706	0.826	0.701	0.683
TXR35PCT-2220-354	22M Socket	0.019	0.236	0.46	0.46	0.657	0.657	0.46	1	0.877	0.997	0.872	0.854
TXR35PCT-2221-354	22M Socket	0.019	0.085	NONE	NONE	0.219	0.219	NONE	NONE	NONE	0.559	0.434	NONE
TXR35PCT-2223-354	22M Socket	0.025	0.405	0.562	0.562	0.759	0.759	0.562	1.102	0.979	1.099	0.974	0.956
TXR35PCT-2225-354	22M Socket	0.028	0.16	0.16	0.16	0.357	0.357	0.16	0.7	0.577	0.697	0.572	0.554
TXR35PCT-2200-355	22M Socket	0.019	0.378	0.213	0.213	0.41	0.41	0.213	0.753	0.63	0.75	0.625	0.607
TXR35PCT-2201-355	22M Socket	0.019	0.209	0.879	0.879	1.076	1.076	0.879	1.419	1.296	1.416	1.291	1.273
TXR9PCT-2202-355	22M Socket	0.019	0.411	0.045	0.045	0.242	0.242	0.045	0.585	0.462	0.582	0.457	0.439
TXR35PCT-2202-355	22M Socket	0.019	0.411	0.045	0.045	0.242	0.242	0.045	0.585	0.462	0.582	0.457	0.439
TXR35PCT-2203-355	22M Socket	0.019	0.308	0.052	0.052	0.249	0.249	0.052	0.592	0.469	0.589	0.464	0.446
TXR35PCT-2204-355	22M Socket	0.019	0.2	0.058	0.058	0.255	0.255	0.058	0.598	0.475	0.595	0.47	0.452
TXR35PCT-2205-355	22M Socket	0.019	0.2	0.039	0.039	0.236	0.236	0.039	0.579	0.456	0.576	0.451	0.433
TXR35PCT-2206-355	22M Socket	0.019	0.258	NONE	NONE	0.172	0.172	NONE	NONE	NONE	0.512	0.387	NONE
TXR35PCT-2210-355	22M Socket	0.019	0.118	0.168	0.168	0.365	0.365	0.168	0.708	0.585	0.705	0.58	0.562
TXR35PCT-2211-355	22M Socket	0.019	0.138	0.188	0.188	0.385	0.385	0.188	0.728	0.605	0.725	0.6	0.582
TXR35PCT-2212-355	22M Socket	0.019	0.157	0.207	0.207	0.404	0.404	0.207	0.747	0.624	0.744	0.619	0.601
TXR35PCT-2213-355	22M Socket	0.019	1.77	0.227	0.227	0.424	0.424	0.227	0.767	0.644	0.764	0.639	0.621
TXR35PCT-2214-355	22M Socket	0.019	1.97	0.247	0.247	0.444	0.444	0.247	0.787	0.664	0.784	0.659	0.641
TXR35PCT-2215-355	22M Socket	0.019	0.217	0.267	0.267	0.464	0.464	0.267	0.807	0.684	0.804	0.679	0.661
TXR35PCT-2216-355	22M Socket	0.019	0.236	0.286	0.286	0.483	0.483	0.286	0.826	0.703	0.823	0.698	0.68
TXR35PCT-2217-355	22M Socket	0.019	0.118	NONE	NONE	0.168	0.168	NONE	NONE	NONE	0.508	0.383	NONE
TXR35PCT-2218-355	22M Socket	0.019	0.138	NONE	NONE	0.188	0.188	NONE	NONE	NONE	0.528	0.403	NONE
TXR35PCT-2219-355	22M Socket	0.019	0.157	NONE	NONE	0.207	0.207	NONE	NONE	NONE	0.547	0.422	NONE
TXR35PCT-2221-355	22M Socket	0.019	0.177	0.03	0.03	0.227	0.227	0.03	0.57	0.447	0.567	0.442	0.424
TXR35PCT-2223-355	22M Socket	0.019	1.97	0.05	0.05	0.247	0.247	0.05	0.59	0.467	0.587	0.462	0.444

Milnec Part Number M30929 Derivative	Contact Size & Type	PCB Tail		CONTACT EXTENSION FROM AMPHENOL REAR ±.003					CONTACT EXTENSION FROM FLANGE ±.003				
		O.D. ±.001	Length ±.001	MS27472, MS27479	MS27664, MS27497	MS27499, MS27504, MS27513	MS27508	MS27474, MS27481	MS27472, MS27479	MS27664, MS27497	MS27499, MS27504, MS27513	MS27508	MS27474, MS27481
TXR35PCT-2225-355	22M Socket	0.019	0.217	0.07	0.07	0.267	0.267	0.07	0.61	0.487	0.607	0.482	0.464
TXR35PCT-2226-355	22M Socket	0.019	0.236	0.089	0.089	0.286	0.286	0.089	0.629	0.506	0.626	0.501	0.483
TXR15PCT-2227-355	22M Socket	0.019	0.236	NONE	NONE	0.124	0.124	NONE	NONE	NONE	0.464	0.339	NONE
TXR15PCT-2228-355	22M Socket	0.019	0.336	NONE	NONE	0.224	0.224	NONE	NONE	NONE	0.564	0.439	NONE
TXR15PCT-2229-355	22M Socket	0.019	0.586	0.277	0.277	0.474	0.474	0.277	0.817	0.694	0.814	0.689	0.671
TXR9PCT-2231-355	22M Socket	0.02	0.212	0.135	0.135	0.332	0.332	0.135	0.675	0.552	0.672	0.547	0.529
TXR9PCT-2232-355	22M Socket	0.02	0.212	0.299	0.299	0.496	0.496	0.299	0.839	0.716	0.836	0.711	0.693
TXR9PCT-2233-355	22M Socket	0.02	0.212	0.443	0.443	0.64	0.64	0.443	0.983	0.86	0.98	0.855	0.837
TXR9PCT-2240-355	22M Socket	0.021	0.393	NONE	NONE	0.224	0.224	NONE	NONE	NONE	0.564	0.439	NONE
TXR15PCT-2241-355	22M Socket	0.019	0.488	0.328	0.328	0.525	0.525	0.328	0.868	0.745	0.865	0.74	0.722
TXR15PCT-2242-355	22M Socket	0.021	0.393	NONE	NONE	0.224	0.224	NONE	NONE	NONE	0.564	0.439	NONE
TXR35PCT-2253-355	22M Socket	0.019	0.394	0.17	0.17	0.367	0.367	0.17	0.71	0.587	0.707	0.582	0.564
TXR35PCT-2255-355	22M Socket	0.019	0.25	NONE	NONE	0.2	0.2	NONE	NONE	NONE	0.54	0.415	NONE
TXR35PCT-2260-355	22M Socket	0.019	0.569	0.517	0.517	0.714	0.714	0.517	1.057	0.934	1.054	0.929	0.911
TXR35PCT-2261-355	22M Socket	0.019	0.509	0.251	0.251	0.448	0.448	0.251	0.791	0.668	0.788	0.663	0.645
TXR35PCT-2262-355	22M Socket	0.019	0.266	0.111	0.111	0.308	0.308	0.111	0.651	0.528	0.648	0.523	0.505
TXR35PCT-2263-355	22M Socket	0.019	0.24	NONE	NONE	0.179	0.179	NONE	NONE	NONE	0.519	0.394	NONE
TXR35PCT-2264-355	22M Socket	0.019	0.152	NONE	NONE	0.166	0.166	NONE	NONE	NONE	0.506	0.381	NONE
TXR35PCT-2265-355	22M Socket	0.019	0.157	NONE	NONE	0.051	0.051	NONE	NONE	NONE	0.391	0.266	NONE
TXR35PCT-2266-355	22M Socket	0.019	0.769	0.607	0.607	0.804	0.804	0.607	1.147	1.024	1.144	1.019	1.001
TXR35PCT-2267-355	22M Socket	0.019	0.172	NONE	NONE	0.21	0.21	NONE	NONE	NONE	0.55	0.425	NONE
TXR35PCT-2268-355	22M Socket	0.019	0.216	0.156	0.156	0.353	0.353	0.156	0.696	0.573	0.693	0.568	0.55
TXR35PCT-2269-355	22M Socket	0.019	0.378	0.227	0.227	0.424	0.424	0.227	0.767	0.644	0.764	0.639	0.621
TXR15PCT-2276-355	22M Socket	0.026	0.336	NONE	NONE	0.224	0.224	NONE	NONE	NONE	0.564	0.439	NONE
TXR9PCT-2276-355	22M Socket	0.026	0.336	NONE	NONE	0.224	0.224	NONE	NONE	NONE	0.564	0.439	NONE
TXR35PCT-2276-355	22M Socket	0.026	0.336	NONE	NONE	0.224	0.224	NONE	NONE	NONE	0.564	0.439	NONE
TXR15PCT-2277-355	22M Socket	0.019	0.236	NONE	NONE	0.124	0.124	NONE	NONE	NONE	0.464	0.339	NONE
TXR9PCT-2277-355	22M Socket	0.019	0.236	NONE	NONE	0.124	0.124	NONE	NONE	NONE	0.464	0.339	NONE
TXR35PCT-2277-355	22M Socket	0.019	0.236	NONE	NONE	0.124	0.124	NONE	NONE	NONE	0.464	0.339	NONE
TXR15PCT-2278-355	22M Socket	0.019	0.336	NONE	NONE	0.224	0.224	NONE	NONE	NONE	0.564	0.439	NONE
TXR9PCT-2278-355	22M Socket	0.019	0.336	NONE	NONE	0.224	0.224	NONE	NONE	NONE	0.564	0.439	NONE
TXR35PCT-2278-355	22M Socket	0.019	0.336	NONE	NONE	0.224	0.224	NONE	NONE	NONE	0.564	0.439	NONE
TXR15PCT-2279-355	22M Socket	0.019	0.586	0.277	0.277	0.474	0.474	0.277	0.817	0.694	0.814	0.689	0.671
TXR9PCT-2279-355	22M Socket	0.019	0.586	0.277	0.277	0.474	0.474	0.277	0.817	0.694	0.814	0.689	0.671
TXR35PCT-2279-355	22M Socket	0.019	0.586	0.277	0.277	0.474	0.474	0.277	0.817	0.694	0.814	0.689	0.671
TXR35PCT-2280-355	22M Socket	0.019	0.509	0.262	0.262	0.459	0.459	0.262	0.802	0.679	0.799	0.674	0.656
TXR35PCT-2281-355	22M Socket	0.019	0.24	NONE	NONE	0.19	0.19	NONE	NONE	NONE	0.53	0.405	NONE
TXR35PCT-2282-355	22M Socket	0.019	0.152	NONE	NONE	0.177	0.177	NONE	NONE	NONE	0.517	0.392	NONE
TXR35PCT-2283-355	22M Socket	0.019	0.157	NONE	NONE	0.067	0.067	NONE	NONE	NONE	0.407	0.282	NONE
TXR35PCT-2284-355	22M Socket	0.019	0.769	0.618	0.618	0.815	0.815	0.618	1.158	1.035	1.155	1.03	1.012
TXR35PCT-2285-355	22M Socket	0.019	0.179	NONE	NONE	0.224	0.224	NONE	NONE	NONE	0.564	0.439	NONE
TXR35PCT-2286-355	22M Socket	0.019	0.216	0.149	0.149	0.346	0.346	0.149	0.689	0.566	0.686	0.561	0.543
TXR35PCT-2287-355	22M Socket	0.019	0.378	0.227	0.227	0.424	0.424	0.227	0.767	0.644	0.764	0.639	0.621
TXR35PCT-2288-355	22M Socket	0.019	0.25	NONE	NONE	0.2	0.2	NONE	NONE	NONE	0.54	0.415	NONE
TXR35PCT-2000-357	20 Socket	0.025	0.118	0.168	0.168	0.365	0.365	0.168	0.708	0.585	0.705	0.58	0.562
TXR35PCT-2001-357	20 Socket	0.025	0.138	0.188	0.188	0.385	0.385	0.188	0.728	0.605	0.725	0.6	0.582
TXR35PCT-2002-357	20 Socket	0.025	0.157	0.207	0.207	0.404	0.404	0.207	0.747	0.624	0.744	0.619	0.601
TXR35PCT-2003-357	20 Socket	0.025	0.177	0.227	0.227	0.424	0.424	0.227	0.767	0.644	0.764	0.639	0.621
TXR35PCT-2004-357	20 Socket	0.025	0.197	0.247	0.247	0.444	0.444	0.247	0.787	0.664	0.784	0.659	0.641
TXR35PCT-2005-357	20 Socket	0.025	0.217	0.267	0.267	0.464	0.464	0.267	0.807	0.684	0.804	0.679	0.661
TXR35PCT-2006-357	20 Socket	0.025	0.236	0.286	0.286	0.483	0.483	0.286	0.826	0.703	0.823	0.698	0.68
TXR35PCT-2007-357	20 Socket	0.025	0.118	NONE	NONE	0.168	0.168	NONE	NONE	NONE	0.508	0.383	NONE
TXR35PCT-2008-357	20 Socket	0.025	0.138	NONE	NONE	0.188	0.188	NONE	NONE	NONE	0.528	0.403	NONE
TXR35PCT-2009-357	20 Socket	0.025	0.157	NONE	NONE	0.207	0.207	NONE	NONE	NONE	0.547	0.422	NONE

Milnec Part Number M30929 Derivative	Contact Size & Type	PCB Tail		CONTACT EXTENSION FROM AMPHENOL REAR ±.003					CONTACT EXTENSION FROM FLANGE ±.003				
		O.D.	Length	MS27472, MS27479	MS27664, MS27497	MS27499, MS27504, MS27513	MS27508	MS27474, MS27481	MS27472, MS27479	MS27664, MS27497	MS27499, MS27504, MS27513	MS27508	MS27474, MS27481
		±.001	±.001										
TXR35PCT-2010-357	20 Socket	0.025	0.177	0.03	0.03	0.227	0.227	0.03	0.57	0.447	0.567	0.442	0.424
TXR35PCT-2011-357	20 Socket	0.025	0.197	0.05	0.05	0.247	0.247	0.05	0.59	0.467	0.587	0.462	0.444
TXR35PCT-2013-357	20 Socket	0.025	0.217	0.07	0.07	0.267	0.267	0.07	0.61	0.487	0.607	0.482	0.464
TXR35PCT-2014-357	20 Socket	0.025	0.236	0.089	0.089	0.286	0.286	0.089	0.629	0.506	0.626	0.501	0.483
TXR35PCT-2015-357	20 Socket	0.02	0.217	0.267	0.267	0.464	0.464	0.267	0.807	0.684	0.804	0.679	0.661
TXR35PCT-2016-357	20 Socket	0.032	0.331	0.354	0.354	0.551	0.551	0.354	0.894	0.771	0.891	0.766	0.748
TXR35PCT-2017-357	20 Socket	0.019	0.235	0.231	0.231	0.428	0.428	0.231	0.771	0.648	0.768	0.643	0.625
TXR35PCT-1600-358	16 Socket	0.062	0.547	0.339	0.339	0.536	0.536	0.339	0.879	0.756	0.876	0.751	0.733
TXR35PCT-1601-358	16 Socket	0.057	0.118	0.364	0.364	0.561	0.561	0.364	0.904	0.781	0.901	0.776	0.758
TXR35PCT-1602-358	16 Socket	0.062	0.118	0.168	0.168	0.365	0.365	0.168	0.708	0.585	0.705	0.58	0.562
TXR35PCT-1603-358	16 Socket	0.062	0.138	0.188	0.188	0.385	0.385	0.188	0.728	0.605	0.725	0.6	0.582
TXR35PCT-1604-358	16 Socket	0.062	0.157	0.207	0.207	0.404	0.404	0.207	0.747	0.624	0.744	0.619	0.601
TXR35PCT-1605-358	16 Socket	0.062	0.177	0.227	0.227	0.424	0.424	0.227	0.767	0.644	0.764	0.639	0.621
TXR35PCT-1606-358	16 Socket	0.062	0.197	0.247	0.247	0.444	0.444	0.247	0.787	0.664	0.784	0.659	0.641
TXR35PCT-1607-358	16 Socket	0.062	0.217	0.267	0.267	0.464	0.464	0.267	0.807	0.684	0.804	0.679	0.661
TXR35PCT-1608-358	16 Socket	0.062	0.236	0.286	0.286	0.483	0.483	0.286	0.826	0.703	0.823	0.698	0.68
TXR35PCT-1609-358	16 Socket	0.062	0.118	NONE	NONE	0.168	0.168	NONE	NONE	NONE	0.508	0.383	NONE
TXR35PCT-1610-358	16 Socket	0.062	0.138	NONE	NONE	0.188	0.188	NONE	NONE	NONE	0.528	0.403	NONE
TXR35PCT-1611-358	16 Socket	0.062	0.157	NONE	NONE	0.207	0.207	NONE	NONE	NONE	0.547	0.422	NONE
TXR35PCT-1613-358	16 Socket	0.062	0.177	0.03	0.03	0.227	0.227	0.03	0.57	0.447	0.567	0.442	0.424
TXR35PCT-1614-358	16 Socket	0.062	0.197	0.05	0.05	0.247	0.247	0.05	0.59	0.467	0.587	0.462	0.444
TXR35PCT-1615-358	16 Socket	0.062	0.217	0.07	0.07	0.267	0.267	0.07	0.61	0.487	0.607	0.482	0.464
TXR35PCT-1617-358	16 Socket	0.062	0.236	0.089	0.089	0.286	0.286	0.089	0.629	0.506	0.626	0.501	0.483
TXR35PCT-1200-359	12 Socket	0.082	0.118	0.168	0.168	0.365	0.365	0.168	0.708	0.585	0.705	0.58	0.562
TXR35PCT-1201-359	12 Socket	0.082	0.138	0.188	0.188	0.385	0.385	0.188	0.728	0.605	0.725	0.6	0.582
TXR35PCT-1202-359	12 Socket	0.082	0.157	0.207	0.207	0.404	0.404	0.207	0.747	0.624	0.744	0.619	0.601
TXR35PCT-1203-359	12 Socket	0.082	0.177	0.227	0.227	0.424	0.424	0.227	0.767	0.644	0.764	0.639	0.621
TXR35PCT-1204-359	12 Socket	0.082	0.197	0.247	0.247	0.444	0.444	0.247	0.787	0.664	0.784	0.659	0.641
TXR35PCT-1205-359	12 Socket	0.082	0.217	0.267	0.267	0.464	0.464	0.267	0.807	0.684	0.804	0.679	0.661
TXR35PCT-1206-359	12 Socket	0.082	0.236	0.286	0.286	0.483	0.483	0.286	0.826	0.703	0.823	0.698	0.68
TXR35PCT-1207-359	12 Socket	0.082	0.118	NONE	NONE	0.168	0.168	NONE	NONE	NONE	0.508	0.383	NONE
TXR35PCT-1208-359	12 Socket	0.082	0.138	NONE	NONE	0.188	0.188	NONE	NONE	NONE	0.528	0.403	NONE
TXR35PCT-1209-359	12 Socket	0.082	0.157	NONE	NONE	0.207	0.207	NONE	NONE	NONE	0.547	0.422	NONE
TXR35PCT-1210-359	12 Socket	0.082	0.177	0.03	0.03	0.227	0.227	0.03	0.57	0.447	0.567	0.442	0.424
TXR35PCT-1211-359	12 Socket	0.082	0.197	0.05	0.05	0.247	0.247	0.05	0.59	0.467	0.587	0.462	0.444
TXR35PCT-1213-359	12 Socket	0.082	0.217	0.07	0.07	0.267	0.267	0.07	0.61	0.487	0.607	0.482	0.464
TXR35PCT-1214-359	12 Socket	0.082	0.236	0.089	0.089	0.286	0.286	0.089	0.629	0.506	0.626	0.501	0.483