Wireless Charging Transmitter Coil / Shield



FEATURES

- Operating temperature: -40 °C to +105 °C
- Specialized shield coating offers superior environmental protection and moisture resistance in high humidity conditions up to 90 % RH
- Silk covered litz wire offers anti-scratching, improved insulation, and protection against wire deformation while reducing electrical skin effect and proximity losses
- Iron core shield achieves excellent saturation current rating
- Round form factor
- Power rating: up to 30 W
- Material categorization: for definitions of compliance please see www.vishay.com/doc?99912

Pb-free

RoHS COMPLIANT

HALOGEN FREE GREEN (5-2008)

LINKS TO ADDITIONAL RESOURCES

Product Page

STANDARD ELECTRICAL SPECIFICATIONS With Test Coil

L_0 INDUCTANCE ± 5 % AT 200 kHz, 0.25 V, 0 A (µH)	Q AT 200 kHz TYP.	DCR ± 5 % AT 25 °C (mΩ)	I_{RMS} (1) (A)	I_{SAT} (2) (A)
24	200	75	6	20

Notes

- Storage condition: -40 °C to +105 °C (on board); less than 40 °C and < 60 % RH (in component packaging)

(1) DC current (A) that will cause an approximate ΔT of 40 °C

(2) DC current (A) that will cause L_0 to drop approximately 20 %

DIMENSIONS in millimeters

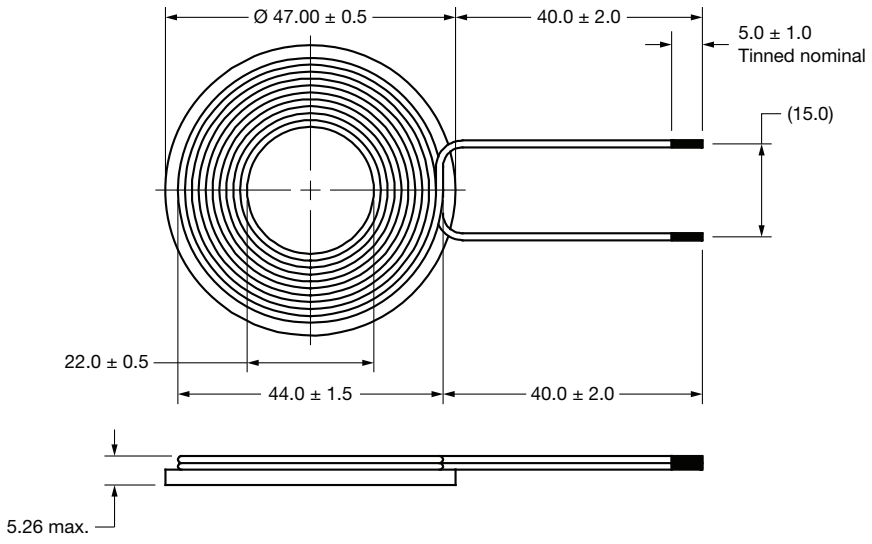

For technical questions, contact: magnetics@vishay.com

THIS DOCUMENT IS SUBJECT TO CHANGE WITHOUT NOTICE. THE PRODUCTS DESCRIBED HEREIN AND THIS DOCUMENT ARE SUBJECT TO SPECIFIC DISCLAIMERS, SET FORTH AT www.vishay.com/doc?91000

DESCRIPTION

IWTX-47R0DA-R1	24 µH	5 %	EB	e3
MODEL	INDUCTANCE	INDUCTANCE TOLERANCE	PACKAGE CODE	JEDEC® LEAD (Pb)-FREE STANDARD

GLOBAL PART NUMBER

I	W	T	X	4	7	R	0	E	B	E	B	2	4	0	J	R	1
MODEL				SHIELD SIZE				SHIELD THICKNESS		LEAD (Pb)-FREE	PACKAGE	INDUCTANCE VALUE			TOL.	MATERIAL	LEAD CONFIG.

For technical questions, contact: magnetics@vishay.com

THIS DOCUMENT IS SUBJECT TO CHANGE WITHOUT NOTICE. THE PRODUCTS DESCRIBED HEREIN AND THIS DOCUMENT ARE SUBJECT TO SPECIFIC DISCLAIMERS, SET FORTH AT www.vishay.com/doc?91000

Disclaimer

ALL PRODUCT, PRODUCT SPECIFICATIONS AND DATA ARE SUBJECT TO CHANGE WITHOUT NOTICE TO IMPROVE RELIABILITY, FUNCTION OR DESIGN OR OTHERWISE.

Vishay Intertechnology, Inc., its affiliates, agents, and employees, and all persons acting on its or their behalf (collectively, “Vishay”), disclaim any and all liability for any errors, inaccuracies or incompleteness contained in any datasheet or in any other disclosure relating to any product.

Vishay makes no warranty, representation or guarantee regarding the suitability of the products for any particular purpose or the continuing production of any product. To the maximum extent permitted by applicable law, Vishay disclaims (i) any and all liability arising out of the application or use of any product, (ii) any and all liability, including without limitation special, consequential or incidental damages, and (iii) any and all implied warranties, including warranties of fitness for particular purpose, non-infringement and merchantability.

Statements regarding the suitability of products for certain types of applications are based on Vishay's knowledge of typical requirements that are often placed on Vishay products in generic applications. Such statements are not binding statements about the suitability of products for a particular application. It is the customer's responsibility to validate that a particular product with the properties described in the product specification is suitable for use in a particular application. Parameters provided in datasheets and / or specifications may vary in different applications and performance may vary over time. All operating parameters, including typical parameters, must be validated for each customer application by the customer's technical experts. Product specifications do not expand or otherwise modify Vishay's terms and conditions of purchase, including but not limited to the warranty expressed therein.

Hyperlinks included in this datasheet may direct users to third-party websites. These links are provided as a convenience and for informational purposes only. Inclusion of these hyperlinks does not constitute an endorsement or an approval by Vishay of any of the products, services or opinions of the corporation, organization or individual associated with the third-party website. Vishay disclaims any and all liability and bears no responsibility for the accuracy, legality or content of the third-party website or for that of subsequent links.

Except as expressly indicated in writing, Vishay products are not designed for use in medical, life-saving, or life-sustaining applications or for any other application in which the failure of the Vishay product could result in personal injury or death. Customers using or selling Vishay products not expressly indicated for use in such applications do so at their own risk. Please contact authorized Vishay personnel to obtain written terms and conditions regarding products designed for such applications.

No license, express or implied, by estoppel or otherwise, to any intellectual property rights is granted by this document or by any conduct of Vishay. Product names and markings noted herein may be trademarks of their respective owners.

© 2024 VISHAY INTERTECHNOLOGY, INC. ALL RIGHTS RESERVED