CHARX T1HBI12-1AC48DC250-5,0M1 - Vehicle charging inlet

1360828

https://www.phoenixcontact.com/us/products/1360828

Please be informed that the data shown in this PDF document is generated from our online catalog. Please find the complete data in the user documentation. Our general terms of use for downloads are valid.

CHARX connect universal, Vehicle charging inlet, for charging with alternating current (AC) and with direct current (DC), CCS type 1, IEC 62196-2, IEC 62196-3, 250 A / 1000 V (DC), 48 A / 250 V (AC), Single wires, length: 2 m, locking actuator: 12 V, 4-pos., Front and rear mounting, M6, housing: black, A protective cap is supplied as standard for the DC and AC contacts.

Product description

Vehicle charging inlet for charging with alternating current (AC) and direct current (DC), compatible with type 1 AC and CCS vehicle charging connectors (EVSE), for installation in electric vehicles (EV).

Your advantages

- Complete product range
- Uniform, space-saving dimensions for the installation space and the screw connection points of all Phoenix Contact vehicle charging inlets
- Developed and produced in accordance with the IATF 16949 automotive standard and ISO 9001
- Integrated interlock during charging
- Manual emergency release of the locking actuator
- Protected and sealed against dirt and water with a high degree of protection

Commercial data

Item number	1360828
Packing unit	1 pc
Minimum order quantity	1 pc
Sales key	EM01
Product key	XWCAIB
GTIN	4063151691943
Weight per piece (including packing)	15,914 g
Weight per piece (excluding packing)	15,914 g
Customs tariff number	85444290
Country of origin	PL

Technical data

Notes

General	A protective cap is supplied as standard for the DC and AC contacts.

Product properties

Product type	Vehicle charging inlet
Product family	CHARX connect universal
Application	for charging with alternating current (AC) and with direct current (DC)
	for installation in electric vehicles (EV)
Technology	Combined Charging System
Charging standard	CCS type 1
Charging mode	Mode 2, 3, 4

Electrical properties

Type of signal transmission	Pulse width modulation with modulated Powerline communication in accordance with ISO/IEC 15118 / DIN SPEC 70121
Note on the connection method	Crimp connection, cannot be disconnected
Insulation resistance	> 200 MΩ
Coding	2.7 kΩ (between PE and CS)
Temperature measurement	DC contacts: 2x PT1000 (DIN EN 60751)
Temperature monitoring	AC contacts: PTC chain (DIN EN 60738-1)
Type of charging current	AC single-phase
Charging power	12 kW
Charging current	48 A
Type of charging current	DC
Charging power	250 kW
Charging current	250 A

Power contact

Number	5 (L1, N, PE, DC+, DC-)
Rated voltage	250 V AC
	1000 V DC
Rated current	48 A AC
	250 A DC

Signal contact

Number	2 (CP, CS)
Rated voltage	30 V AC
Rated current	2 A

Temperature sensors (PTC chain)

Sensor type	PTC chain

Standards/regulations	DIN EN 60738-1
Attachment point	Sensor for the AC contacts
Measuring range_resistance	790.00 Ω ... 1420.00 Ω
Resistance	max. 1200 Ω ±5 K
Ambient temperature	-40 °C ... 130 °C (Operation)

Temperature sensors (Pt 1000)

Sensor type	Pt 1000
Standards/regulations	DIN EN 60751
Attachment point	2 sensors for the DC contacts

Locking actuator

Operating voltage	12 V
Note number of positions	4-pos.
Position of the locking actuator	top center

Locking actuator

Operating voltage	12 V
Note number of positions	4-pos.
Position of the locking actuator	top center
Possible power supply range at the motor	9 V ... 16 V
Maximum voltage for locking detection	12 V
Typical motor current for locking	0.25 A
Reverse current of the motor	max. 1.5 A
Max. dwell time with reverse current	1 s
Recommended adaptation time	600 ms
Pause time after entry or exit path	3 s
Service life insertion cycles	> 10000 load cycles
Lock recognition	available
Mechanical emergency release	available
Ambient temperature (operation)	-40 °C ... 80 °C

Dimensions

Width	117.6 mm
Height	90 mm
Depth	117.6 mm

Material specifications

Color (Housing)	black (9005)
Color (Mating face)	black (9005)
Material (Housing)	Plastic
Material (Contact surface)	Silver

Cable/line

Cable length	2 m
Cable type	Single wires

Single wire, cross section	95.00 mm²

Single-core wires for AC

Cable length	5 m
Cable structure	2 x 6 mm²
Single wire, material	Silicone
Single wire, color	OG
External cable diameter	12.60 mm ±0.2 mm
Cable resistance	≤ 3.2 Ω/km

Single-core wires for DC

Cable length	5 m
Cable structure	2 x 95 mm²
Single wire, material	Silicone
Single wire, color	OG
External cable diameter	20.60 mm ±0.3 mm
Cable resistance	≤ 0.196 Ω/km

Single-core wire for PE

Cable length	5 m
Cable structure	1 x 25 mm²
Single wire, material	Silicone
Single wire, color	GN/YE
External cable diameter	8.60 mm ±0.1 mm
Cable resistance	≤ 0.743 Ω/km

Single-core wires for locking actuator

Cable length	1.5 m
Cable structure	4 x 0.5 mm²
Single wire, material	PVC
Single wire, color	BU/RD, BU/GN, BU/YE, BU/BN
External cable diameter	1.60 mm ±0.20 mm
Cable resistance	≤ 37.1 Ω/m

Single-core wires for PTC temperature sensors

Cable length	1 m
Cable structure	5 x 0,5 mm²
Single wire, color	BN/GY
	BN/YE/GN
External cable diameter	1.60 mm ±0.20 mm
Cable resistance	≤ 37.1 Ω/m

Single-core wires for Pt 1000 temperature sensors

Cable length	1 m
Cable structure	3 x 0.5 mm²
Single wire, material	PVC
	BN

Single wire, color	GN
	YE
External cable diameter	1.60 mm ±0.20 mm
Cable resistance	≤ 37.1 Ω/m

Single-core wires for communication

Cable length	1 m
Cable structure	2 x 0.5 mm²
Single wire, material	PVC
Single wire, color	BK
	WH
External cable diameter	1.60 mm ±0.20 mm
Cable resistance	≤ 37.1 Ω/m

Mechanical properties

Mechanical data

Insertion/withdrawal cycles	> 10000
Insertion force	< 100 N
Withdrawal force	< 100 N

Environmental and real-life conditions

Ambient conditions

Degree of protection (Vehicle charging inlet)	IP55 (plugged in; when plugged in and ready to operate, the degree of protection is only ensued if both plug-in components are original products from Phoenix Contact or suitable standard-compliant products)
	IP67 (Inner area of vehicle charging inlet)
Ambient temperature (operation)	-40 °C ... 40 °C ()
Ambient temperature (storage/transport)	-40 °C ... 85 °C
Altitude	4000 m (above sea level)

Standards and regulations

Standards

Standards/regulations	IEC 62196-2
	IEC 62196-3
	SAE J1772

Mounting

Mounting type	Front and rear mounting (0 to 90 degree frontal inclination possible)
Mounting hole diameter	6.70 mm (ø)
Fixing screws	M6
Screws included in the scope of delivery	none

Drawings

Schematic diagram

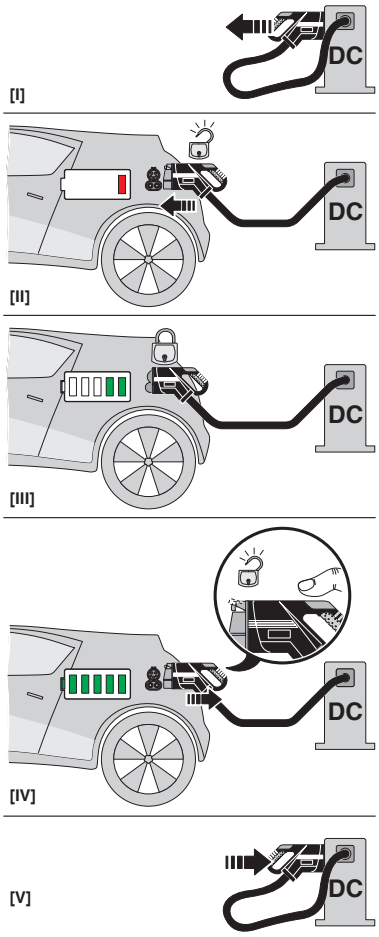

Operating instructions

Schematic diagram

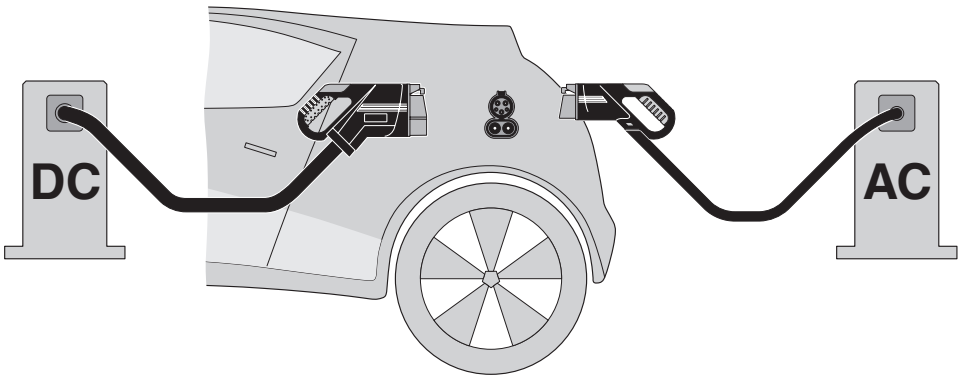

The Combined Charging System (CCS) principle - standard-compliant charging system for electric vehicles, which supports both conventional AC charging and fast DC charging. Both Vehicle Connectors fit into the CCS Vehicle Inlet.

Diagram

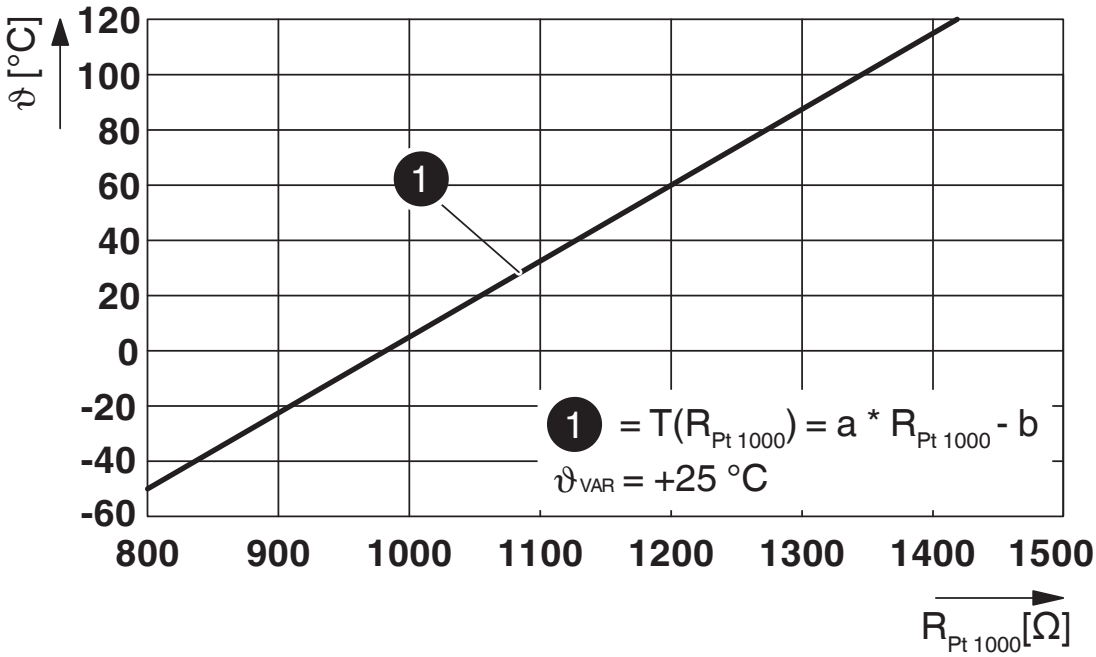

Pt 1000 characteristic curve at an ambient temperature of 25°C for temperature measurement at the DC contacts

Connection diagram

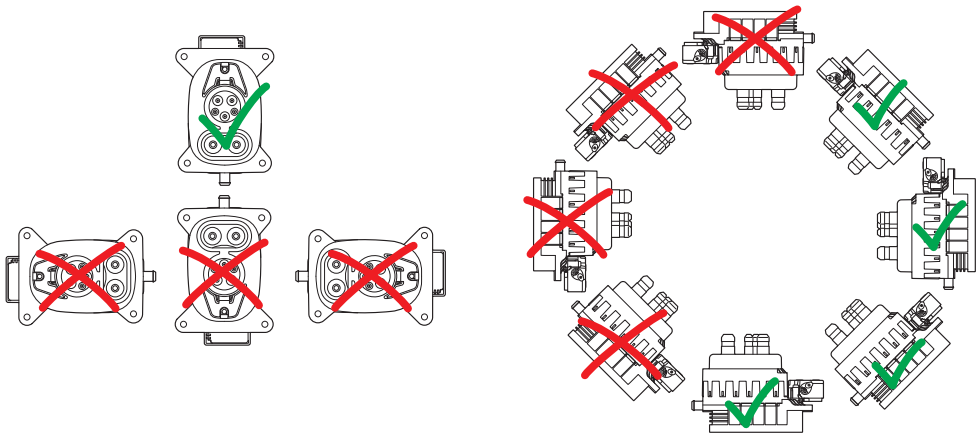

Installation positions

Dimensional drawing

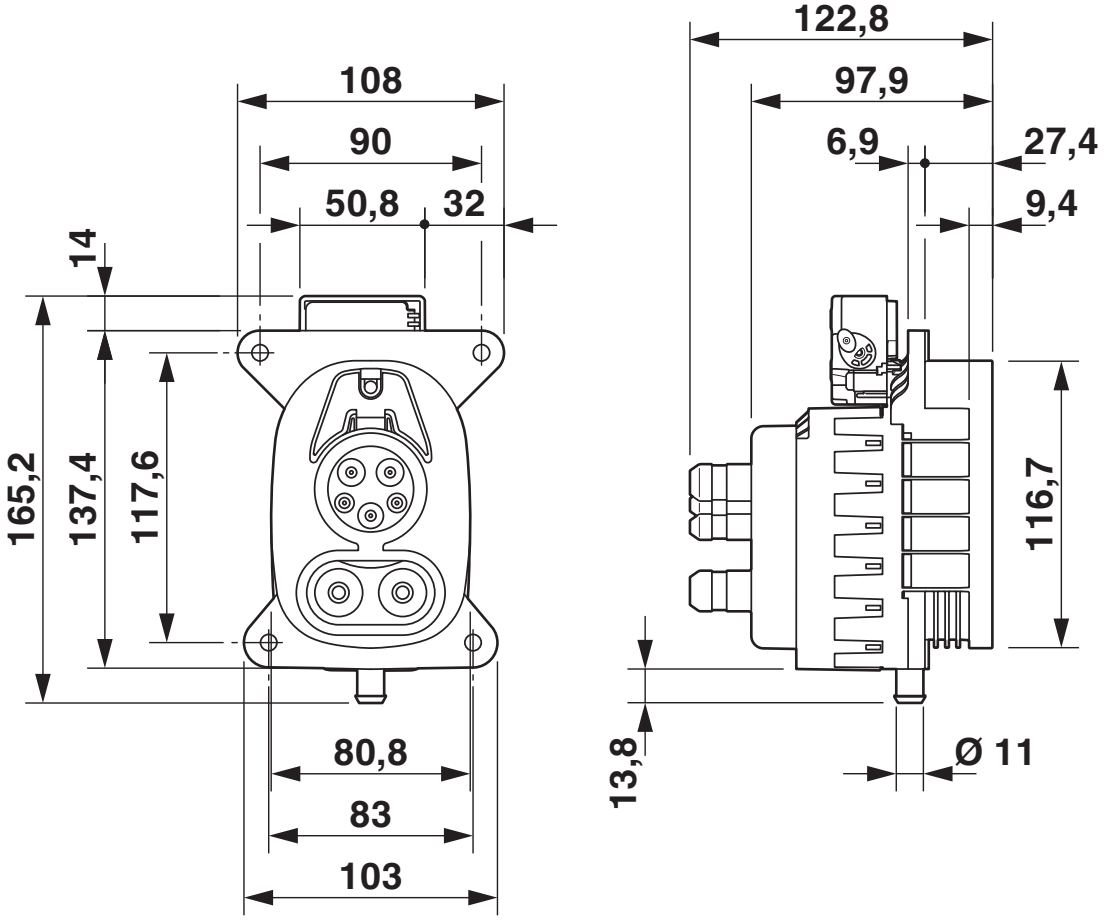

Dimensional drawing

Connection diagram

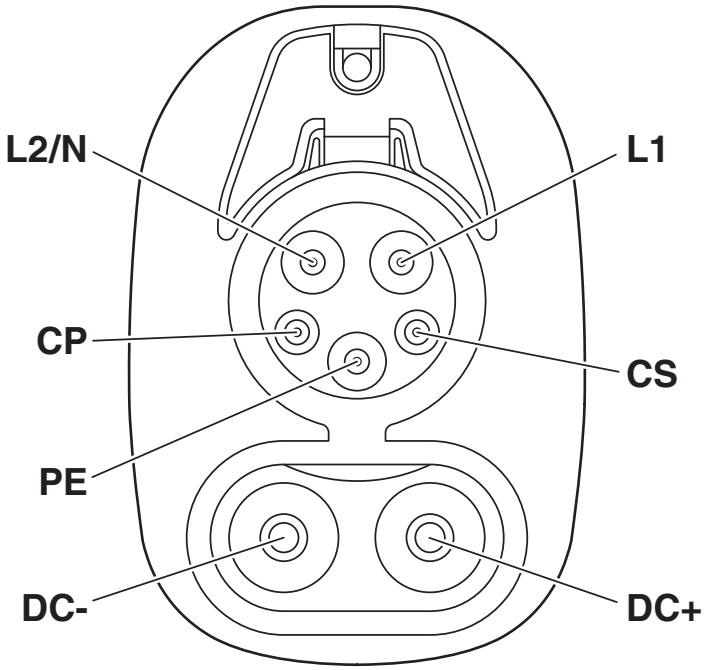

Pin assignment of vehicle charging inlets

Schematic diagram

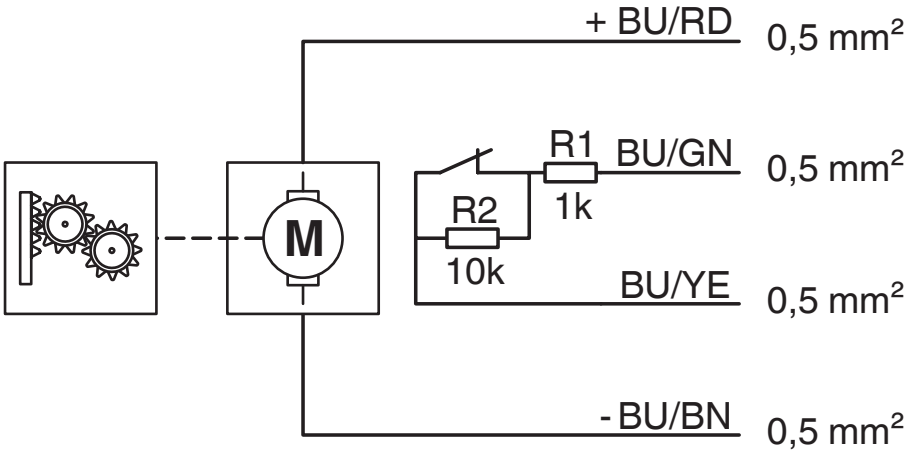

Block diagram of the locking actuator

Schematic diagram

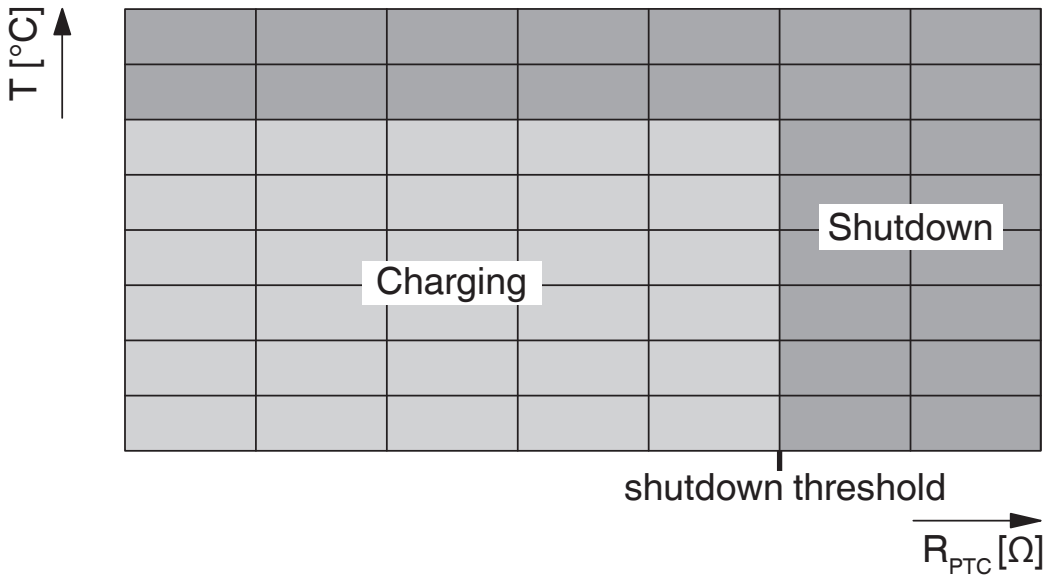

Temperature sensor technology resistance range at AC contacts

Connection diagram

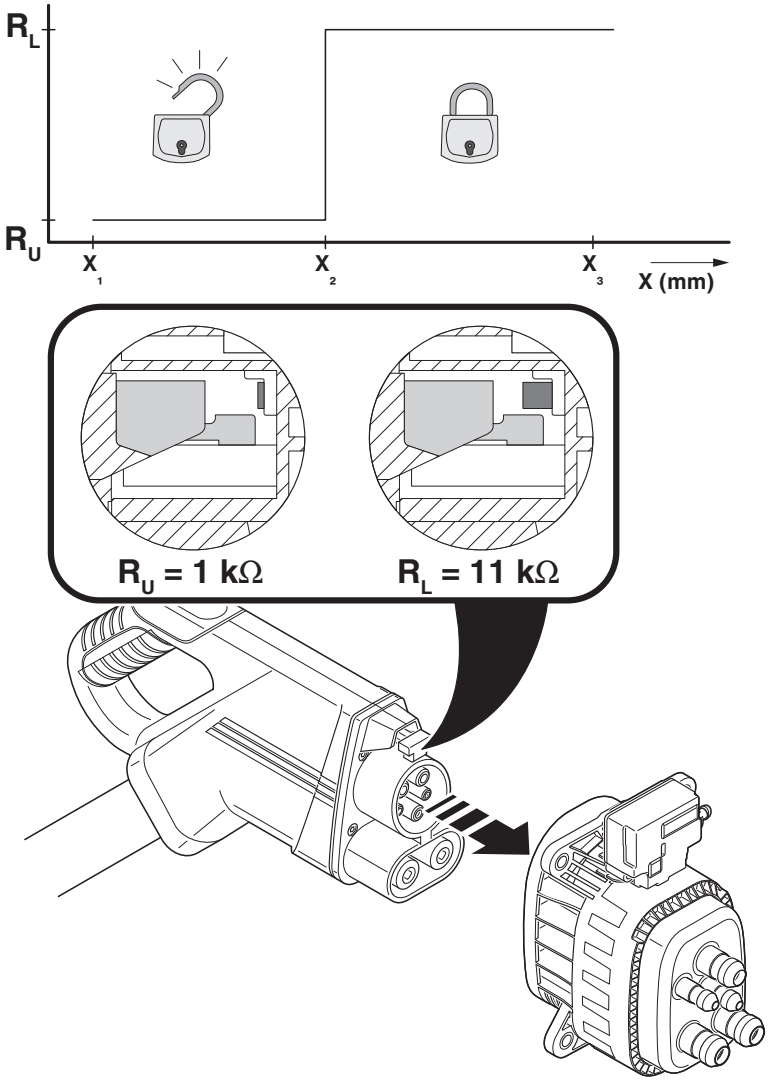

Detection for Vehicle Connector

Diagram

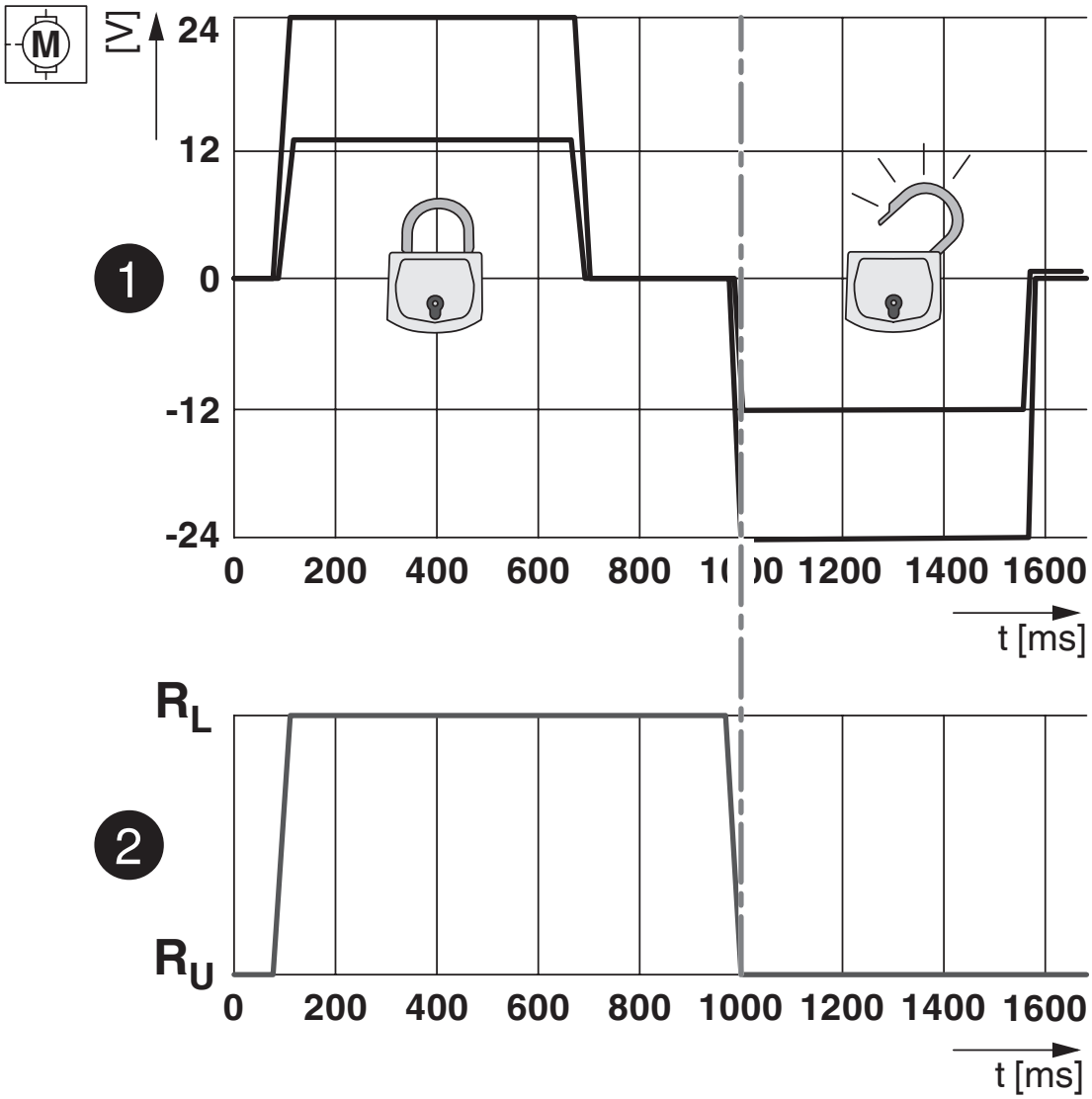

Locking states of the locking actuator

Approvals

To download certificates, visit the product detail page: https://www.phoenixcontact.com/us/products/1360828

cULus Recognized
Approval ID: E473195-20210730

Classifications

ECLASS

ECLASS-11.0	27144706
ECLASS-12.0	27144706
ECLASS-13.0	27144706

ETIM

ETIM 9.0	EC002898

UNSPSC

UNSPSC 21.0	39121800

Environmental product compliance

EU RoHS

Fulfills EU RoHS substance requirements	Yes
Exemption	6(c), 7(c)-I

China RoHS

Environment friendly use period (EFUP)	EFUP-10
	An article-related China RoHS declaration table can be found in the download area for the respective article under "Manufacturer declaration". For all articles with EFUP-E, no China RoHS declaration table issued and required.

Accessories

CHARX T1HBI-DUST-COVER-SET - Protective cover

1305482

https://www.phoenixcontact.com/us/products/1305482

CHARX connect universal, Protective cover, Accessories, for vehicle charging inlet, CCS type 1, Plug-on assembly, housing: black

CHARX T1HI-ELOCK12V - Locking

1331528

https://www.phoenixcontact.com/us/products/1331528

CHARX connect universal, Locking, Accessories, for mounting on vehicle charging inlets, Type 1, IEC 61851-1, Single wires, length: 1 m, locking actuator: 12 V, 4-pos.

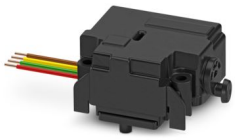

Phoenix Contact 2024 © - all rights reserved
https://www.phoenixcontact.com

Phoenix Contact USA
586 Fulling Mill Road
Middletown, PA 17057, United States
(+717) 944-1300
info@phoenixcon.com