PASTERNACK
an INFINITE brand



TNC Male to TNC Female Adapter, IP67 UnMated

RF Adapters Technical Data Sheet

PE91240

Configuration

- TNC Male Connector 1
- TNC Female Connector 2
- 50 Ohm
- Straight Body Geometry

Features

- Max VSWR of 1.3:1 up to 6 GHz
- Rated IP67 UnMated
- Gold Plated Beryllium Copper Contact

Applications

- Connector Saver
- General Purpose Test

Description

Pasternack's PE91240 TNC male to TNC female adapter is part of our full line of RF components available for same-day shipping. Our TNC to TNC adapter has a male to female gender configuration. PE91240 TNC male to TNC female adapter operates to 6 GHz. The Pasternack RF adapter provides good VSWR of 1.3:1 maximum. The PE91240 Pasternack RF adapter can also be used as a connector saver to extend equipment life.

RF adapters are often used to enable connections between two connector types that would otherwise not mate. Certain adapter configurations can also be used to protect connectors on expensive equipment where the number of connect/disconnect cycles is high. An RF, microwave or millimeter wave adapter is connected to the equipment, and the commonly changed connection is made with the adapter which can be easily replaced when it wears out after high usage; such adapters are referred to as connector savers. Pasternack also offers bulkhead, panel mount, hermetically sealed, reverse polarity, and isolated ground adapter varieties to serve all of your RF, microwave and millimeter wave needs.

Electrical Specifications

Description	Minimum	Typical	Maximum	Units
Frequency Range	DC		6	GHz
VSWR			1.3:1	

Mechanical Specifications

Size

Length	1.323 in [33.6 mm]
Weight	0.0492 lbs [22.32 g]

Description	Connector 1	Connector 2
Type	TNC Male	TNC Female
Polarity	Standard	Standard

Click the following link (or enter part number in "SEARCH" on website) to obtain additional part information including price, inventory and certifications: TNC Male to TNC Female Adapter, IP67 UnMated PE91240

Pasternack Enterprises, Inc. • P.O. Box 16759, Irvine, CA 92623
Phone: (866) 727-8376 or (949) 261-1920 • **Fax:** (949) 261-7451
Sales@Pasternack.com • Techsupport@Pasternack.com

© 2020 Pasternack Enterprises All Rights Reserved

PASTERNACK
an INFINITE brand



TNC Male to TNC Female Adapter, IP67 UnMated

Material Specifications

Description	Connector 1 Material	Connector 1 Plating	Connector 2 Material	Connector 2 Plating
Type	TNC Male		TNC Female	
Contact	Beryllium Copper	Gold	Beryllium Copper	Gold
Insulation	PTFE		PTFE	
Outer Conductor			Brass	Tri-Metal
Body	Brass	Tri-Metal	Brass	Tri-Metal
Gasket	Silicone		Silicone	
Coupling Nut	Brass	Tri-Metal		

Environmental Specifications

Temperature

Operating Range	-55 to +120 ºC
Ingress Protection (IP) Rating	IP67 UnMated

Compliance Certifications (see product page for current document)

Plotted and Other Data

Notes:

TNC Male to TNC Female Adapter, IP67 UnMated from Pasternack Enterprises has same day shipment for domestic and International orders. Our RF, microwave and millimeter wave products maintain a 99.4% availability and are part of the broadest selection in the industry.

Click the following link (or enter part number in “SEARCH” on website) to obtain additional part information including price, inventory and certifications: TNC Male to TNC Female Adapter, IP67 UnMated PE91240

URL: https://www.pasternack.com/tnc-male-tnc-female-straight-adapter-pe91240-p.aspx

The information contained in this document is accurate to the best of our knowledge and representative of the part described herein. It may be necessary to make modifications to the part and/or the documentation of the part, in order to implement improvements. Pasternack reserves the right to make such changes as required. Unless otherwise stated, all specifications are nominal. Pasternack does not make any representation or warranty regarding the suitability of the part described herein for any particular purpose, and Pasternack does not assume any liability arising out of the use of any part or documentation.

Pasternack Enterprises, Inc. • P.O. Box 16759, Irvine, CA 92623
Phone: (866) 727-8376 or (949) 261-1920 • **Fax:** (949) 261-7451
Sales@Pasternack.com • Techsupport@Pasternack.com

© 2020 Pasternack Enterprises All Rights Reserved

PE91240 CAD Drawing

TNC Male to TNC Female Adapter, IP67 UnMated

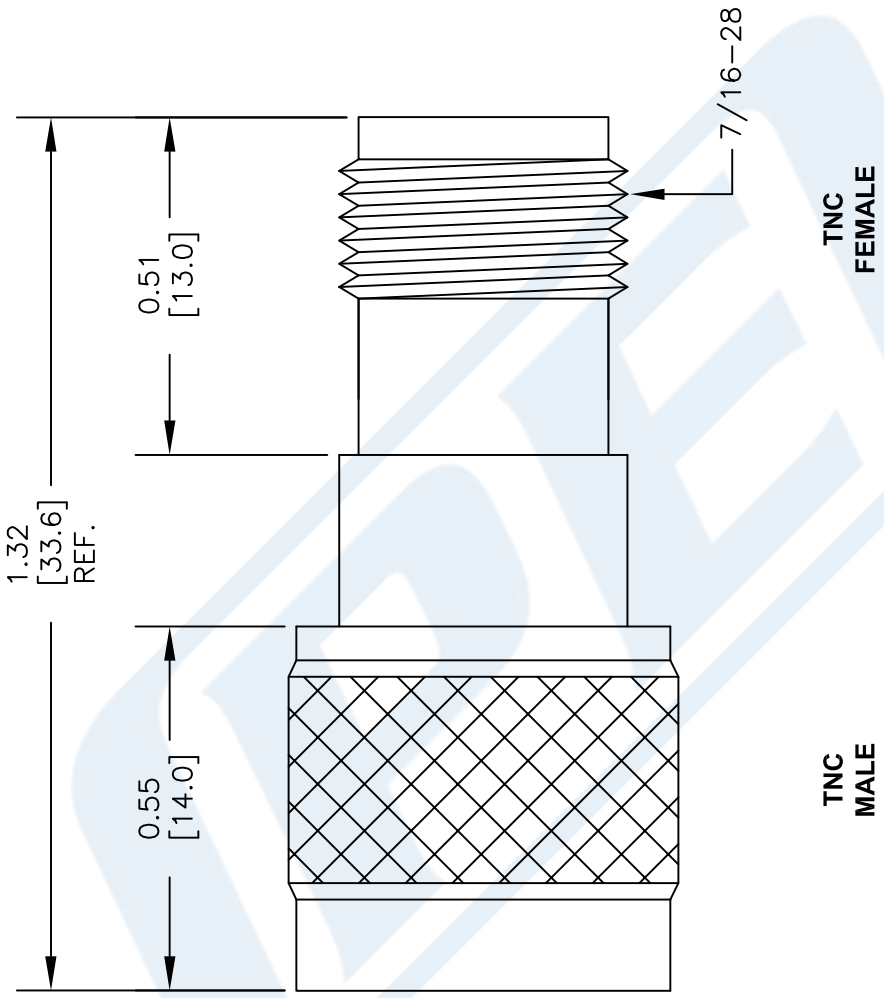

NOTES:
1. UNLESS OTHERWISE SPECIFIED ALL DIMENSIONS ARE NOMINAL.
2. ALL SPECIFICATIONS ARE SUBJECT TO CHANGE WITHOUT NOTICE AT ANY TIME.
3. DIMENSIONS ARE IN INCHES [mm].

CAD FILE	060614	SCALE N/A	SIZE A	2233

DWG TITLE **PE91240**

FSCM NO. 53919

PASTERNACK
THE ENGINEER'S RF SOURCE
Pasternack Enterprises, Inc.
P.O. Box 16759 | Irvine | CA | 92623
Phone: (949) 261-1920 | **Fax:** (949) 261-7451
Website: www.pasternack.com | **E-Mail:** sales@pasternack.com

© 2020 Pasternack Enterprises All Rights Reserved