PASTERNACK
an INFINITE brand



SP4T Electromechanical Relay Latching Switch, +COM, DC to 52 GHz, 5W, 28VDC, 2.4mm

Electromechanical Relay Switches Technical Data Sheet PE71S6566

Features

- Single Pole Four Throw (SP4T) Electromechancial Relay Switch
- DC to 52 GHz Frequency Range
- Latching Actuator
- Positive Common (+COM) Configuration
- 2M Lifecycle Rating
- Insertion Loss 1.5 dB typ
- Isolation > 70 dB typ
- VSWR as low as 1.3:1 max
- 15 PIN D-SUB Connector for DC Control
- 28 Volt DC Bias
- 2.4mm Female Connectors
- -25°C to +65°C Operating Temperature
- 5 Watt Average Power Handling
- 50 Ohm Design
- Hot Switching Capability - Consult Factory
- S-Parameter Data available upon request
- Rugged Design meets Mil-STD-202 Test Conditions
- Actuating Set / Reset Feature

Applications

- Aerospace & Defense
- Test & Measurement
- Microwave Radio Systems
- Military & Commercial Communication Systems
- Research & Development
- SATCOM
- Wireless Communications
- Enterprise
- IoT

Description

The PE71S6566 is a Single Pole Four Throw (SP4T) electromechanical relay switch that operates across an ultra wideband frequency range from DC to 52 GHz and can handle 5W of average power in a break before make condition. The 50 Ohm design supports a positive common (+COM) biasing configuration and features a Latching Actuator with a 1 million lifecycle rating. The Latching Actuator magnetically latches in place after the control voltage is removed. For power sensitive applications, this is the best actuator option. Impressive typical performance includes 1.5 dB insertion loss and isolation greater than 70 dB. This switch requires 28 Vdc bias voltage and operates over a temperature range of -25°C to +65°C. The rugged and compact package assembly supports 2.4mm female connectors and a 15 Pin D-SUB Connector for DC control. And for highly reliable operation, the model is guaranteed to meet MIL-STD-202 environmental test conditions for shock and random vibration.

Electrical Specifications (TA = 25°C, DC Voltage = 28 Vdc)

Switch Type	SP4T
Actuator Type	Latching

Description	Minimum	Typical	Maximum	Units
Frequency Range	DC		52	GHz
Operating Voltage	26	28	30	Volts
Actuating Set Current @		110		mA
Actuating Reset Current		440		mA
VSWR		1.7:1	2.8:1	
Insertion Loss		1.5	2.3	dB
Isolation	50	80		dB

Click the following link (or enter part number in “SEARCH” on website) to obtain additional part information including price, inventory and certifications: SP4T Electromechanical Relay Latching Switch, +COM, DC to 52 GHz, 5W, 28VDC, 2.4mm PE71S6566

Pasternack Enterprises, Inc. • P.O. Box 16759, Irvine, CA 92623
Phone: (866) 727-8376 or (949) 261-1920 • **Fax:** (949) 261-7451
Sales@Pasternack.com • Techsupport@Pasternack.com

© 2020 Pasternack Enterprises All Rights Reserved

PASTERNACK
an INFINITE brand

SP4T Electromechanical Relay Latching Switch, +COM, DC to 52 GHz, 5W, 28VDC, 2.4mm



Electromechanical Relay Switches Technical Data PE71S6566

Switching Time	<20	ms Typ

Performance by Frequency

Description	F1	F2	F3	F4	F5	Units
Frequency Range	DC to 6	6 to 12.4	12.4 to 18	18 to 26.5	26.5 to 40	GHz
VSWR, Max	1.3:1	1.4:1	1.5:1	1.7:1	1.9:1	
Insertion Loss, Max	0.2	0.4	0.5	0.7	0.9	dB
Isolation, Min	70	60	60	55	50	dB

Performance by Frequency

Description	F6	F7	F8	F9	F10	Units
Frequency Range	40 to 50	50 to 52				GHz
VSWR, Max	2.2:1	2.8:1				
Insertion Loss, Max	1.3	2.3				dB
Isolation, Min	50	50				dB

Mechanical Specifications

Size

Length	2.05 in [52.07 mm]
Width/Diameter	1.5 in [38.1 mm]
Height	0.52 in [13.21 mm]
Weight	0.164 lbs [74.39 g]

Connectors

RF Connector Type	2.4mm Female
Control Connector	D-Subminiature

Environmental Specifications

Temperature

Operating Range	-25 to +65 deg C
Storage Range	-55 to +100 deg C
Shock	MIL-STD-202 Method 213, Condition D, 500G (non oper)
Vibration	MIL-STD-202 Method 204, Condition D, 10G RMS (non oper)

Click the following link (or enter part number in “SEARCH” on website) to obtain additional part information including price, inventory and certifications: SP4T Electromechanical Relay Latching Switch, +COM, DC to 52 GHz, 5W, 28VDC, 2.4mm PE71S6566

Pasternack Enterprises, Inc. • P.O. Box 16759, Irvine, CA 92623
Phone: (866) 727-8376 or (949) 261-1920 • **Fax:** (949) 261-7451
Sales@Pasternack.com • Techsupport@Pasternack.com

© 2020 Pasternack Enterprises All Rights Reserved



SP4T Electromechanical Relay Latching Switch, +COM, DC to 52 GHz, 5W, 28VDC, 2.4mm

Electromechanical Relay Switches Technical Data PE71S6566

Compliance Certifications (see product page for current document)

Plotted and Other Data

Notes:

Typical Performance Data

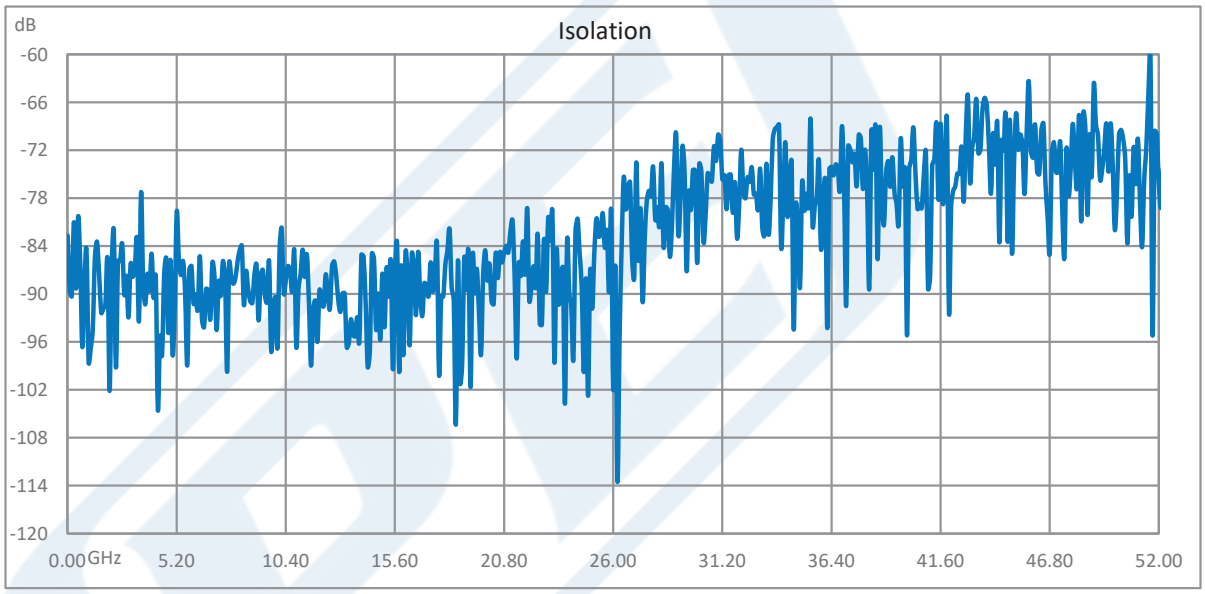

Click the following link (or enter part number in “SEARCH” on website) to obtain additional part information including price, inventory and certifications: SP4T Electromechanical Relay Latching Switch, +COM, DC to 52 GHz, 5W, 28VDC, 2.4mm PE71S6566

Pasternack Enterprises, Inc. • P.O. Box 16759, Irvine, CA 92623
Phone: (866) 727-8376 or (949) 261-1920 • **Fax:** (949) 261-7451
Sales@Pasternack.com • Techsupport@Pasternack.com

© 2020 Pasternack Enterprises All Rights Reserved

SP4T Electromechanical Relay Latching Switch, +COM, DC to 52 GHz, 5W, 28VDC, 2.4mm



Electromechanical Relay Switches Technical Data PE71S6566

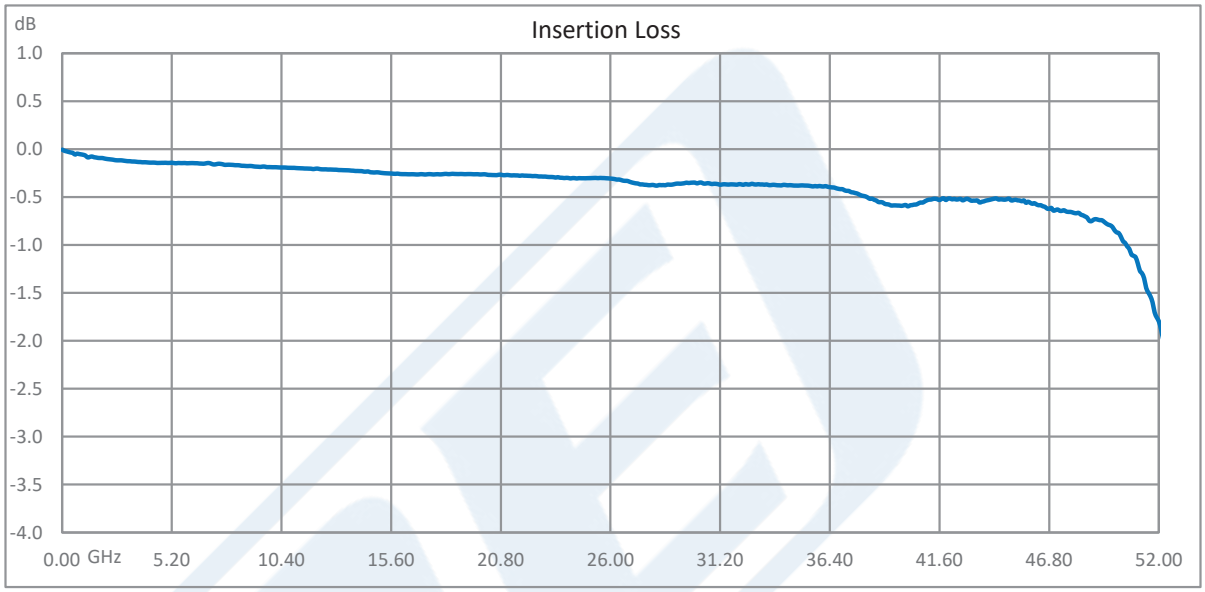

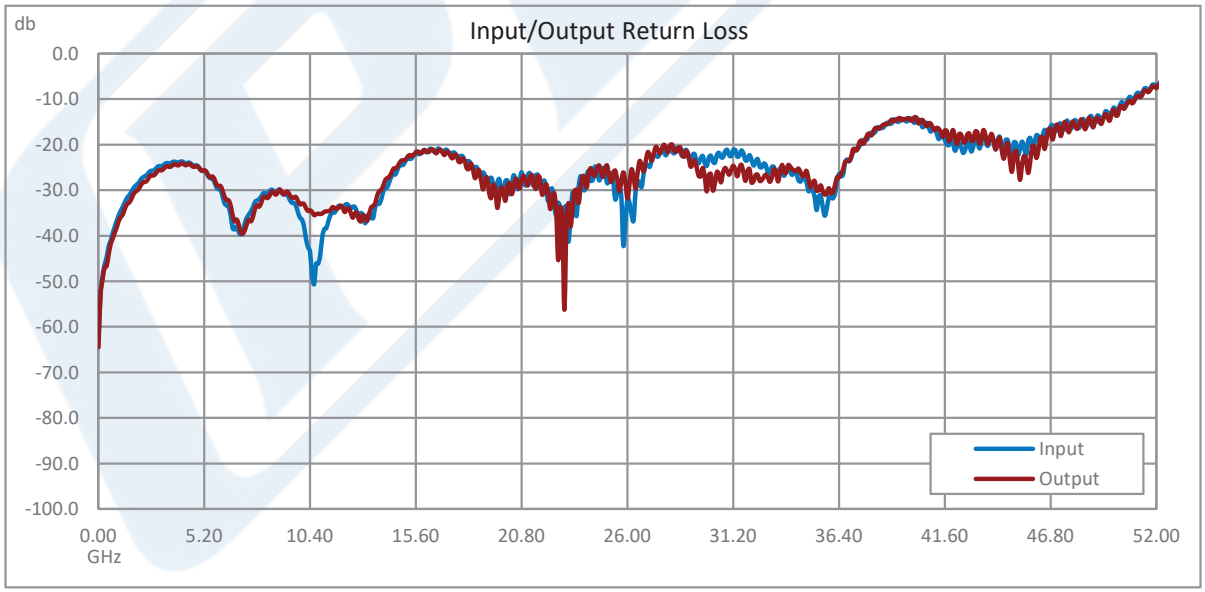

Click the following link (or enter part number in “SEARCH” on website) to obtain additional part information including price, inventory and certifications: SP4T Electromechanical Relay Latching Switch, +COM, DC to 52 GHz, 5W, 28VDC, 2.4mm PE71S6566

Pasternack Enterprises, Inc. • P.O. Box 16759, Irvine, CA 92623
Phone: (866) 727-8376 or (949) 261-1920 • **Fax:** (949) 261-7451
Sales@Pasternack.com • Techsupport@Pasternack.com

© 2020 Pasternack Enterprises All Rights Reserved

PASTERNACK
an INFINITE brand



SP4T Electromechanical Relay Latching Switch, +COM, DC to 52 GHz, 5W, 28VDC, 2.4mm

Electromechanical Relay Switches Technical Data PE71S6566

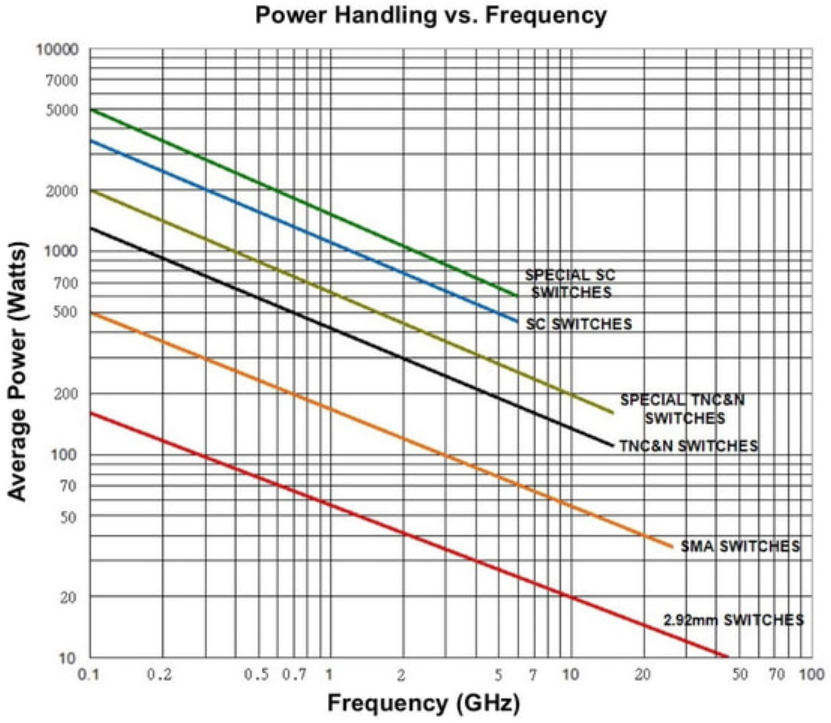

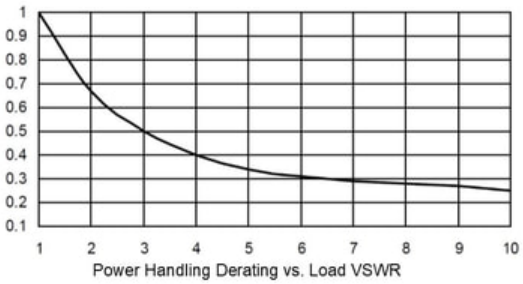

Power handling chart and derating curves based on the following conditions:

- Ambient temperature: 40°C or less
- Altitude: Sea level
- Load VSWR: 1.20:1 Maximum
- Relative Humidity: 40-50%
- Cold switching: RF signal off

Note: specifications subject to change without notice

Click the following link (or enter part number in “SEARCH” on website) to obtain additional part information including price, inventory and certifications: SP4T Electromechanical Relay Latching Switch, +COM, DC to 52 GHz, 5W, 28VDC, 2.4mm PE71S6566

Pasternack Enterprises, Inc. • P.O. Box 16759, Irvine, CA 92623
Phone: (866) 727-8376 or (949) 261-1920 • **Fax:** (949) 261-7451
Sales@Pasternack.com • Techsupport@Pasternack.com

© 2020 Pasternack Enterprises All Rights Reserved

PASTERNACK
an INFINITE brand



SP4T Electromechanical Relay Latching Switch, +COM, DC to 52 GHz, 5W, 28VDC, 2.4mm

Electromechanical Relay Switches Technical Data PE71S6566

SP4T Electromechanical Relay Latching Switch, +COM, DC to 52 GHz, 5W, 28VDC, 2.4mm from Pasternack Enterprises has same day shipment for domestic and International orders. Our RF, microwave and millimeter wave products maintain a 99.4% availability and are part of the broadest selection in the industry.

Click the following link (or enter part number in “SEARCH” on website) to obtain additional part information including price, inventory and certifications: SP4T Electromechanical Relay Latching Switch, +COM, DC to 52 GHz, 5W, 28VDC, 2.4mm PE71S6566

URL: https://www.pasternack.com/sp4t-electromechanical-relay-latching-switch-52-ghz-28v-2.4mm-pe71s6566-p.aspx

The information contained in this document is accurate to the best of our knowledge and representative of the part described herein. It may be necessary to make modifications to the part and/or the documentation of the part, in order to implement improvements. Pasternack reserves the right to make such changes as required. Unless otherwise stated, all specifications are nominal. Pasternack does not make any representation or warranty regarding the suitability of the part described herein for any particular purpose, and Pasternack does not assume any liability arising out of the use of any part or documentation.

Pasternack Enterprises, Inc. • P.O. Box 16759, Irvine, CA 92623
Phone: (866) 727-8376 or (949) 261-1920 • **Fax:** (949) 261-7451
Sales@Pasternack.com • Techsupport@Pasternack.com

© 2020 Pasternack Enterprises All Rights Reserved

© 2020 Pasternack Enterprises All Rights Reserved

PE71S6566 CAD Drawing

SP4T Electromechanical Relay Latching Switch, +COM, DC to 52 GHz, 5W, 28VDC, 2.4mm

REVISION					
ZONE	REV.	DESCRIPTION	DATE	CHANGED BY	APPROVED BY
	A	INITIAL RELEASE	02/09/2023	DMAY	TGALLA

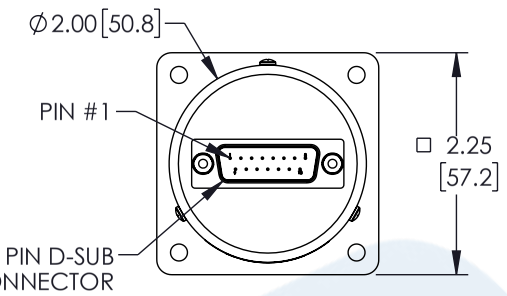

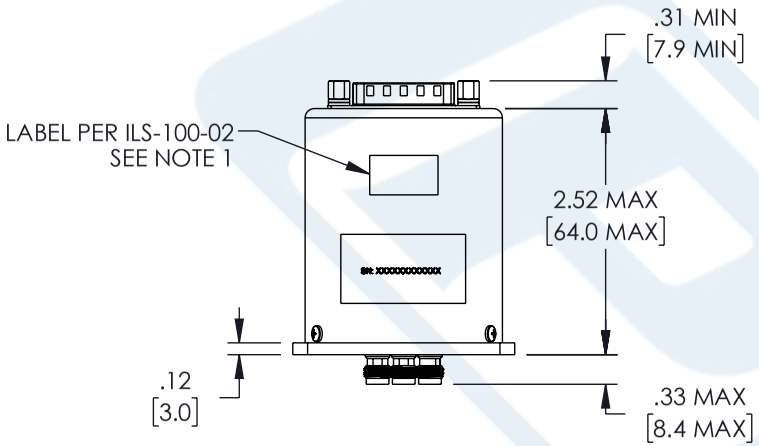

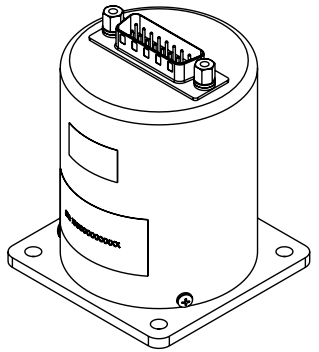

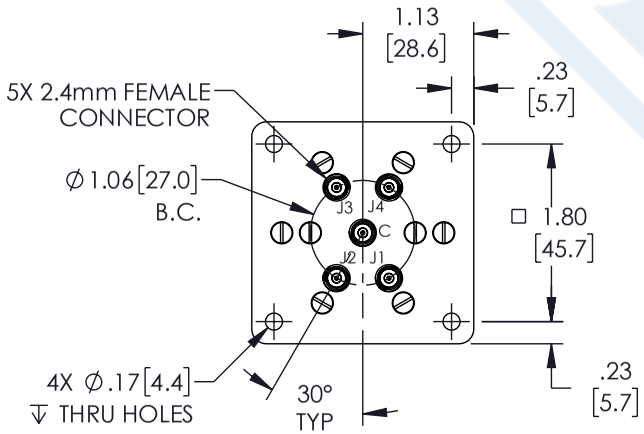

NOTES:
1. LABEL PER ILS-100-02. FOR INTERNAL REFERENCE ONLY
LABEL LOCATION FOR REFERENCE ONLY.

THE INFORMATION CONTAINED IN THIS DRAWING IS THE SOLE PROPERTY OF INFINITE ELECTRONICS, INC. ANY REPRODUCTION IN PART OR WHOLE WITHOUT THE WRITTEN PERMISSION OF INFINITE ELECTRONICS, INC. IS PROHIBITED.
THESE COMMODITIES, TECHNOLOGY OR SOFTWARE WERE EXPORTED FROM THE UNITED STATES IN ACCORDANCE WITH THE EXPORT ADMINISTRATION REGULATIONS. DIVERSION CONTRARY TO U.S. LAW PROHIBITED.

UNLESS OTHERWISE SPECIFIED
LEADING DIMENSIONS ARE INCHES
DIMENSIONS IN [ ] ARE MILLIMETERS

TOLERANCES:

.X = ±.2 [5]	FRACTIONS
.XX = ±.02 [.5]	± 1/32
.XXX = ±.005 [.13]	ANGLES ± 1°

CABLE LENGTH TOLERANCES:

≤12 [305] = +1 [25] / -0
>12 [305] ≤ 60 [1524] = +2 [51] / -0
>60 [1524] ≤ 120 [3048] = +4 [102] / -0
>120 [3048] ≤ 300 [7620] = +6 [152] / -0
>300 [7620] = +5% / -0

ALL DIMENSIONS ARE FOR REFERENCE ONLY AND SUBJECT TO CHANGE WITHOUT NOTICE.

PASTERNACK® an INFINITE brand
Website: www.Pasternack.com
Phone: 1.866.727.8376 | 1.949.261.1920

INTERPRET ALL DIMENSIONS AND TOLERANCES PER ASME Y14.5

SCALE	SHEET
NONE	1 OF 2

DESCRIPTION: SP4T, 2.4mm, LATCHING, +COM, 52GHz, 28VDC, D-SUB

SIZE	CAGE CODE	DRAWN BY	ITEM NO.	REV
A	53919	DMAY	PE71S6566	A

T-Rev.D2

© 2020 Pasternack Enterprises All Rights Reserved

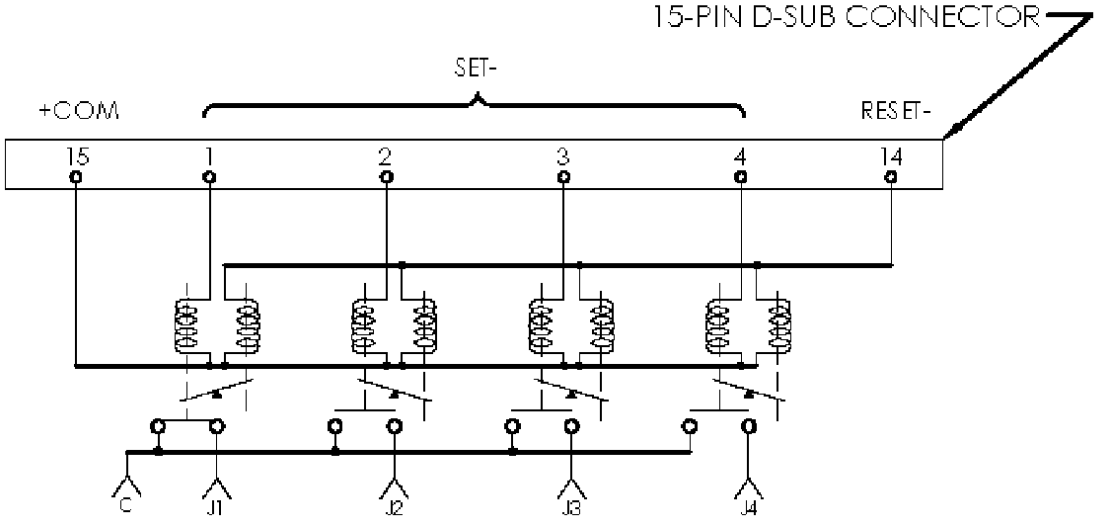

SCHEMATIC

(COIL 1 SHOWN LAST ENERGIZED)

ACTUATION CHARACTRISTICS:

- REQUIRES TWO (2) SEQUENTIAL PULSES (RESET & SET)
- T1 & T2 = 30mSEC MIN
- T3 = 10mSEC MIN
- T4 & T5 = 20mSEC MAX

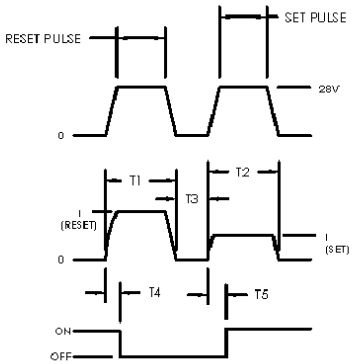

TRUTH TABLE/PIN ASSIGNMENT :

PIN ASSIGNMENT

TERMINALS / D-SUB PIN ASSIGNMENT	RF PATH			
	J1	J2	J3	J4
1 (SET-)	ON	OFF	OFF	OFF
2 (SET-)	OFF	ON	OFF	OFF
3 (SET-)	OFF	OFF	ON	OFF
4 (SET-)	OFF	OFF	OFF	ON
14 (RESET-)	ALL OFF			

PIN 15. +COM

UNLESS OTHERWISE SPECIFIED
LEADING DIMENSIONS ARE INCHES
DIMENSIONS IN [ ] ARE MILLIMETERS

TOLERANCES:

.X = ±.2 [5]
.XX = ±.02 [.5]
.XXX = ±.005 [.13]
FRACTIONS ± 1/32
ANGLES ± 1°

CABLE LENGTH TOLERANCES:

≤12 [305] = +1 [25] / -0
>12 [305] ≤ 60 [1524] = +2 [51] / -0
>60 [1524] ≤ 120 [3048] = +4 [102] / -0
>120 [3048] ≤ 300 [7620] = +6 [152] / -0
>300 [7620] = +5% / -0

ALL DIMENSIONS ARE FOR REFERENCE ONLY AND SUBJECT TO CHANGE WITHOUT NOTICE.

PASTERNACK® an INFINITE® brand

Website: www.Pasternack.com
Phone: 1.866.727.8376 | 1.949.261.1920

INTERPRET ALL DIMENSIONS AND TOLERANCES PER ASME Y14.5

SCALE	SHEET
NONE	2 OF 2

DESCRIPTION: SP4T, 2.4mm, LATCHING, +COM, 52GHz, 28VDC, D-SUB

SIZE	CAGE CODE	DRAWN BY	ITEM NO.	REV
A	53919	DMAY	PE71S6566	A

THE INFORMATION CONTAINED IN THIS DRAWING IS THE SOLE PROPERTY OF INFINITE ELECTRONICS, INC. ANY REPRODUCTION IN PART OR WHOLE WITHOUT THE WRITTEN PERMISSION OF INFINITE ELECTRONICS, INC. IS PROHIBITED.
THESE COMMODITIES, TECHNOLOGY OR SOFTWARE WERE EXPORTED FROM THE UNITED STATES IN ACCORDANCE WITH THE EXPORT ADMINISTRATION REGULATIONS. DIVERSION CONTRARY TO U.S. LAW PROHIBITED.

T-Rev.D2

PE71S6566 CAD Drawing

SP4T Electromechanical Relay Latching Switch, +COM, DC to 52 GHz, 5W, 28VDC, 2.4mm