NextGen Components,Inc.

PART CODE: **SL567M100HLLRR**

SPECIFICATION SHEET

SPECIFICATION SHEET NO.	R0112- SL567M100HLLRR	
DATE	Jan.12, 2024	
REVISION	A0	Updated With Most Recent Data - Official First Release
DESCRIPTION AND MAIN PARAMETRICS	Through Hole Long Load Life Aluminum Electrolytic Capacitors, Radial Type SL series, 2 Pins, Capacitance: 560µF, Tolerance ±20%, Voltage 100V, Case size: Ø18.0*L31.5mm, Ripple Current: 2860mA, Max. Impedance @+20°C, 100KHz 0.030 ohm Max. Load Life: 10,000 Hours, Operating Temp. Range -40°C ~+105°C RoHS/RoHS III Compliant & Halogen Free Package in Bulk	
CUSTOMER		
CUSTOMER PART NO.		
CROSS REF. PART NO.		
ORIGINAL MFG/PART NO.	Aillen Capacitors/ CBE567M2AHSLL3ARR	
PART CODE	SL567M100HLLRR	

VENDOR APPROVE			
Issued/Checked/Approved	Mandy Xu	Ruby Zhang	Jack Zhang
DATE: Jan.12, 2024			

CUSTOMER APPROVE
DATE:

NextGen Components, Inc. sales@NextGenComponent.com www.NextGenComponent.com

DIP ALUMINUM ELECTROLYTIC CAPACITORS SL SERIES

MAIN FEATURE

- Through Hole Aluminum Electrolytic Capacitors, Radial Type
- Long Load Life
- Package in Bulk, Box and Tape Option
- Cross Competitors Parts and more.
- RoHS/RoHS III Compliant & Halogen Free

APPLICATION

- For Standard Circuit Like Coupling Filter And Energy Storage Etc.

ELECTRICAL CHARACTERISTICS

See Page 6 ~ Page 11 For Different Part Code

HOW TO ORDER

Please follow up Part Code Guide and indicate pat code when you order or RFQ.

RFQ

Request For Quotation

PART CODE GUIDE

CODE	NAME	KEY SPECIFICATION OPTION
SL	Dip Aluminum Electrolytic Capacitors, Radial Type	SL series
567	Rated Capacitance Code	336: 33µF; 476: 47µF; 566: 56µF; 686: 68µF; 826: 82µF; 107: 100µF; 127: 120µF; 157: 150µF; 187: 180µF; 227: 220µF 277: 270µF; 337: 330µF; 397: 390µF; 477: 470µF; 567: 560µF 687: 680µF; 827: 820µF; 108: 1000µF; 128: 1200µF; 158: 1500µF; 188: 1800µF; 228: 2200µF;278: 2700µF; 338: 3300µF; 398: 3900µF; 478: 4700µF; 568: 5600µF; 688: 6800µF; 828: 8200µF; 109: 10000µF;
M	Capacitance Tolerance Code	M: ±20%; V: -10% ~ +20%,
100	Rated Voltage Code	6V3: 6.3V; 010: 10V; 016:16V; 025: 25V; 035: 35V; 050: 50V; 063: 63V; 100: 100V;
H	Environmental Requirements code	R: RoHS III Complaint; H: RoHS III Complaint & Halogen Free
L	Aluminum Case Diameter Code	D: Ø5.0mm; E: Ø6.3mm; F: Ø8.0mm; G: Ø10.0mm; I:Ø12.5mm; J: Ø13.0mm; K: Ø16.0mm; L: Ø18.0mm; N: Ø22.0mm
L	Aluminum Case Heigh Code	A: L10mm; B: L11mm; C: L12mm; D: L12.5mm; E: L13.5mm F: L14.5mm: G: L16mm; H: L20mm; I: L21.5mm; J: L25mm; K: L30mm; L: L31.5mm; M: L35mm; N: L35.5mm; O: L40mm When the code is number, it represent the actual height. eg. 7: L7.0mm; 8: L8.0mm; 9: L9.0mm
RR	Lead Pitch/Package Code (see Page 22 ~Page 30)	RR: Bulk; R2: Lead Pitch=2.5mm Bulk; T2: Lead Pitch=2.0mm Tape TB: Lead Pitch=2.5mm Tape; T3: Lead Pitch=3.5mm Tape; T5: Lead Pitch=5.0mm Tape; T7: Lead Pitch=7.5mm Tape; CA: Cutting Lead long=3.0mm; CB: Cutting Lead long=3.5mm; CC: Cutting Lead long=4.0mm; CD: Cutting Lead long=4.5mm
( )	Internal Control Code or special Parameters code	Blank: N/A or Letter A~Z or digits (1-9)

DIMENSIONS (Unit: mm)

Image for reference

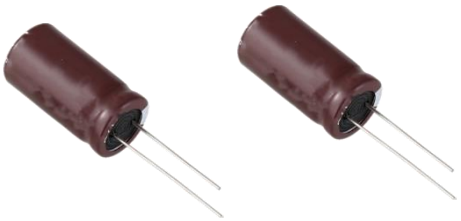

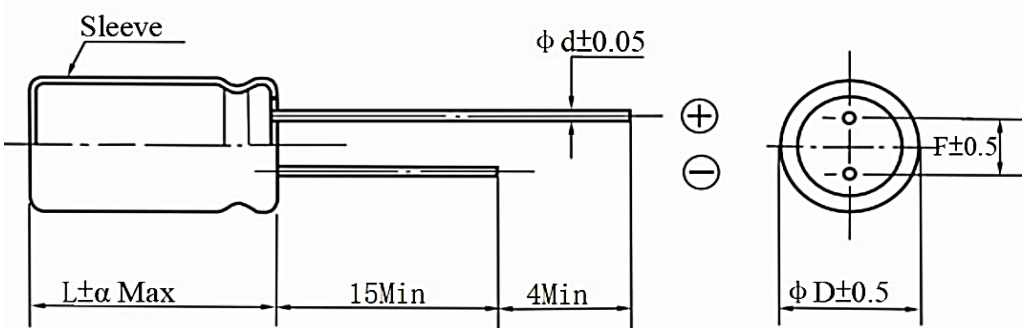

SYMBOL	DIMENSION										
D	5.0	6.3	8.0 @L<20	8.0 @L≥20	10	12.5	13	16	18	20	22
F	2.0	2.5	2.5	3.5	5.0	5.0	5.0	7.5	7.5	7.5	10
d	0.45 @L≤7.0; 0.5 @L>7.0			0.6	0.6	0.6	0.6	0.8	0.8	0.8	1.0
α	1.0: @L≤7.0 ; 1.5: @7.0 < L < 20; 2.0: @L≥20										

MARKING GUIDE

NAME	SYMBOL	CONTENT
Nominal Capacitance	①	560µF
Rated Voltage	②	100V
Polarity		
Original Manufacturer	③	Aillen
QC Code and Series Code	④	CDSL
Temperature Range	⑤	-40~+105℃
Casing Type		Sleeve And Printing Color White Printing on brown Sleeve
Marking		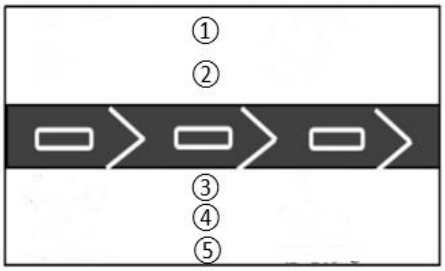

STANDARD ELECTRICAL CHARACTERISTICS

PARAMETER	UNITS	VALUE	CONDITION
Capacitance Tolerance	%	+/-20	@+20°C
Operating Junction Temperature Range	°C	-40 ~ +105	
Storage Temperature Range	°C	-55 ~ +150	

Remark:

1. Specification are subject to change without notice should a safety or technical concern arise regarding the product ,please be sure to contact our sales offices
2. The sizes in the above table are all general specifications. If you need other specifications, please contact us.

DIP ALUMINUM ELECTROLYTIC CAPACITORS SL SERIES

ELECTRICAL CHARACTERISTICS - Ta = 25℃

Part Code	Capacitance @20°C	Rate Voltage	Surge Voltage	Max. Dissipation Factor @+20°C 120Hz	Max. Impedance @+20°C 100KHz	Max. Ripple Current @at 105°C, 100kHz	Load Life @ 105°C
	µF	V	V	%	Ω	mA rms	Hour
SL477M6V3HEBRR	470	6.3	8	22	0.17	540	6000
SL827M6V3HFCRR	820	6.3	8	22	0.075	945	8000
SL108M6V3HFGRR	1000	6.3	8	22	0.059	1250	9000
SL128M6V3HGDRR	1200	6.3	8	22	0.053	1330	9000
SL158M6V3HFHRR	1500	6.3	8	22	0.041	1500	9000
SL188M6V3HGGRR	1800	6.3	8	22	0.038	1760	10000
SL278M6V3HGHRR	2700	6.3	8	22	0.028	1960	10000
SL338M6V3HGJRR	3300	6.3	8	22	0.024	2250	10000
SL398M6V3HJHRR	3900	6.3	8	22	0.025	2480	10000
SL478M6V3HJJRR	4700	6.3	8	22	0.019	2900	10000
SL568M6V3HJKRR	5600	6.3	8	22	0.018	3450	10000
SL688M6V3HKHRR	6800	6.3	8	22	0.021	3250	10000
SL828M6V3HKJRR	8200	6.3	8	22	0.017	3630	10000
SL337M010HEBRR	330	10	13	19	0.17	700	7000
SL567M010HFCRR	560	10	13	19	0.075	1200	9000
SL687M010HFGRR	680	10	13	19	0.059	1600	10000
SL827M010HGDRR	820	10	13	19	0.053	1700	9000
SL108M010HFHRR	1000	10	13	19	0.041	1960	10000
SL128M010HGGRR	1200	10	13	19	0.038	2000	10000
SL188M010HGHRR	1800	10	13	19	0.028	2500	10000
SL228M010HGJRR	2200	10	13	19	0.024	2900	10000
SL278M010HJHRR	2700	10	13	19	0.025	2600	10000
SL338M010HJJRR	3300	10	13	19	0.019	3200	10000

ELECTRICAL CHARACTERISTICS - Ta = 25℃

Part Code	Capacitance @20°C	Rate Voltage	Surge Voltage	Max. Dissipation Factor @+20°C 120Hz	Max. Impedance @+20°C 100KHz	Max. Ripple Current @at 105°C, 100kHz	Load Life @ 105°C
	µF	V	V	%	Ω	mA rms	Hour
SL478M010HJKRR	4700	10	13	19	0.018	3660	10000
SL478M010HKHRR	4700	10	13	19	0.021	3330	10000
SL568M010HJMRR	5600	10	13	19	0.016	4120	10000
SL568M010HKJRR	5600	10	13	19	0.017	3810	10000
SL277M016HEBRR	270	16	20	*16*	0.17	700	7000
SL477M016HFCRR	470	16	20	16	0.075	1200	9000
SL567M016HFGRR	560	16	20	16	0.059	1600	10000
SL687M016HGDRR	680	16	20	16	0.053	1700	9000
SL827M016HFHRR	820	16	20	16	0.041	1960	10000
SL108M016HGGRR	1000	16	20	16	0.038	2000	10000
SL158M016HGHRR	1500	16	20	16	0.028	2500	10000
SL188M016HGJRR	1800	16	20	16	0.024	2900	10000
SL228M016HJHRR	2200	16	20	16	0.025	2600	10000
SL278M016HJJRR	2700	16	20	16	0.019	3200	10000
SL338M016HJKRR	3300	16	20	16	0.018	3660	10000
SL338M016HKHRR	3300	16	20	16	0.021	3330	10000
SL478M016HKJRR	4700	16	20	16	0.017	3810	10000
SL157M025HECRR	150	25	32	14	0.17	700	7000
SL337M025HFCRR	330	25	32	14	0.075	1200	9000
SL397M025HFGRR	390	25	32	14	0.059	1600	10000
SL477M025HGDRR	470	25	32	14	0.053	1700	9000
SL567M025HFHRR	560	25	32	14	0.041	1960	10000
SL687M025HGGRR	680	25	32	14	0.038	2000	10000

ELECTRICAL CHARACTERISTICS - Ta = 25℃

Part Code	Capacitance @20°C	Rate Voltage	Surge Voltage	Max. Dissipation Factor @+20°C 120Hz	Max. Impedance @+20°C 100KHz	Max. Ripple Current @at 105°C, 100kHz	Load Life @ 105°C
	µF	V	V	%	Ω	mA rms	Hour
SL108M025HGHRR	1000	25	32	14	0.028	2500	10000
SL128M025HGJRR	1200	25	32	14	0.024	2900	10000
SL158M025HJHRR	1500	25	32	14	0.025	2600	10000
SL188M025HJJRR	1800	25	32	14	0.019	3200	10000
SL228M025HKHRR	2200	25	32	14	0.021	3330	10000
SL228M025HJKRR	2200	25	32	14	0.018	3660	10000
SL338M025HKJRR	3300	25	32	14	0.017	3810	10000
SL109M025HLNRR	10000	25	32	14	0.014	4220	10000
SL107M035HECRR	100	35	44	12	0.17	700	7000
SL107M035HGDT5	100	35	44	12	0.065	1300	10000
SL187M035HFCRR	180	35	44	12	0.075	1200	9000
SL227M035HFGRR	220	35	44	12	0.059	1600	10000
SL277M035HGDRR	270	35	44	12	0.053	1700	9000
SL337M035HFHRR	330	35	44	12	0.041	1960	10000
SL397M035HGGRR	390	35	44	12	0.038	2000	10000
SL567M035HGHRR	560	35	44	12	0.028	2500	10000
SL687M035HGJRR	680	35	44	12	0.024	2900	10000
SL827M035HJHRR	820	35	44	12	0.025	2600	10000
SL108M035HGJRR	1000	35	44	12	0.027	2500	10000
SL128M035HJJRR	1200	35	44	12	0.019	3200	10000
SL158M035HJKRR	1500	35	44	12	0.018	3660	10000
SL158M035HKHRR	1500	35	44	12	0.021	3330	10000
SL188M035HKJRR	1800	35	44	12	0.017	3810	10000

DIP ALUMINUM ELECTROLYTIC CAPACITORS SL SERIES

ELECTRICAL CHARACTERISTICS - Ta = 25℃

Part Code	Capacitance @20°C	Rate Voltage	Surge Voltage	Max. Dissipation Factor @+20°C 120Hz	Max. Impedance @+20°C 100KHz	Max. Ripple Current @at 105°C, 100kHz	Load Life @ 105°C
	µF	V	V	%	Ω	mA rms	Hour
SL566M050HECRR	56	50	63	10	0.22	500	7000
SL107M050HFCRR	100	50	63	10	0.12	950	9000
SL127M050HFGRR	120	50	63	10	0.082	1230	10000
SL157M050HGDRR	150	50	63	10	0.073	1280	9000
SL187M050HFHRR	180	50	63	10	0.058	1580	10000
SL227M050HGGRR	220	50	63	10	0.053	1650	10000
SL337M050HGHRR	330	50	63	10	0.038	2060	10000
SL397M050HGJRR	390	50	63	10	0.032	2420	10000
SL477M050HJHRR	470	50	63	10	0.032	2300	10000
SL477M050HGHRR	470	50	63	10	0.038	2060	10000
SL687M050HJJRR	680	50	63	10	0.025	2800	10000
SL827M050HJKRR	820	50	63	10	0.023	3370	10000
SL827M050HKHRR	820	50	63	10	0.026	3070	10000
SL108M050HKJRR	1000	50	63	10	0.022	3510	10000
SL826M063HFCRR	82	63	79	9	0.18	720	8000
SL107M063HFGRR	100	63	79	9	0.13	990	9000
SL127M063HGDRR	120	63	79	9	0.11	990	9000
SL157M063HFHRR	150	63	79	9	0.096	1200	9000
SL187M063HGGRR	180	63	79	9	0.076	1200	10000
SL227M063HGGRR	220	63	79	9	0.076	1200	10000
SL277M063HGHRR	270	63	79	9	0.056	1570	10000
SL337M063HGJRR	330	63	79	9	0.046	1990	10000
SL397M063HJHRR	390	63	79	9	0.041	1990	10000

ELECTRICAL CHARACTERISTICS - Ta = 25℃

Part Code	Capacitance @20°C	Rate Voltage	Surge Voltage	Max. Dissipation Factor @+20°C 120Hz	Max. Impedance @+20°C 100KHz	Max. Ripple Current @at 105℃, 100kHz	Load Life @ 105℃
	µF	V	V	%	Ω	mA rms	Hour
SL477M063HJJRR	470	63	79	9	0.031	2460	10000
SL567M063HJKRR	560	63	79	9	0.028	2760	10000
SL567M063HKHRR	560	63	79	9	0.032	2380	10000
SL687M063HJKRR	680	63	79	9	0.026	2800	10000
SL827M063HKJRR	820	63	79	9	0.025	2890	10000
SL336M100HFCRR	33	100	125	8	0.29	620	8000
SL476M100HFGRR	47	100	125	8	0.20	780	9000
SL566M100HGDRR	56	100	125	8	0.17	780	9000
SL686M100HFHRR	68	100	125	8	0.16	1040	9000
SL826M100HGGRR	82	100	125	8	0.11	1040	10000
SL107M100HGHRR	100	100	125	8	0.084	1430	10000
SL127M100HGJRR	120	100	125	8	0.069	1620	10000
SL157M100HJHRR	150	100	125	8	0.062	1750	10000
SL227M100HJJRR	220	100	125	8	0.047	2210	10000
SL277M100HJKRR	270	100	125	8	0.042	2400	10000
SL277M100HKHRR	270	100	125	8	0.048	1950	10000
SL397M100HKJRR	390	100	125	8	0.038	2430	10000
SL397M100HLHRR	390	100	125	8	0.045	2270	10000
SL477M100HKLRR	470	100	125	8	0.032	2640	10000
SL477M100HLJRR	470	100	125	8	0.036	2500	10000
SL567M100HKNRR	560	100	125	8	0.029	2860	10000
SL567M100HLLRR	560	100	125	8	0.030	2860	10000
SL687M100HKORR	680	100	125	8	0.027	3510	10000

ELECTRICAL CHARACTERISTICS - Ta = 25℃

Part Code	Capacitance @20°C	Rate Voltage	Surge Voltage	Max. Dissipation Factor @+20°C 120Hz	Max. Impedance @+20°C 100KHz	Max. Ripple Current @at 105℃, 100kHz	Load Life @ 105℃
	µF	V	V	%	Ω	mA rms	Hour
SL687M100HLNRR	680	100	125	8	0.027	3510	10000
SL827M100HLORR	820	100	125	8	0.026	3860	10000

Remark:

1. Specification are subject to change without notice should a safety or technical concern arise regarding the product ,please be sure to contact our sales offices
2. The sizes in the above table are all general specifications. If you need other specifications, please contact us.

CONSTRUCTION

Single ended type to be produced to fix the terminals to anode and cathode foil, and wind together with paper, and then wound element to be impregnated with electrolyte will be enclosed in an aluminum case. Finally sealed up tightly with end seal rubber, then finished by putting on the vinyl sleeve.

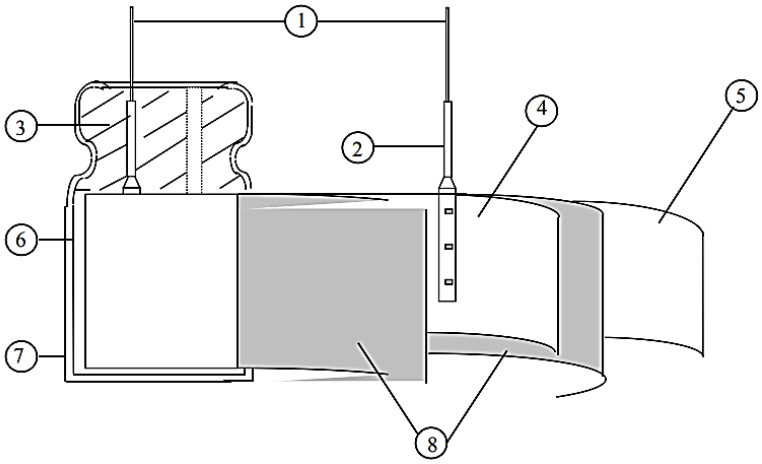

NO.	COMPONENT	MATERIAL
1	Lead Line	Tinned CP Wire (Pb Free)
2	Terminal	Aluminum Wire
3	Sealing Material	Rubber
4	Al-Foil (+)	Formed Aluminum Foil
5	Al-Foil (-)	Etched Aluminum Foil Or Formed Aluminum Foil
6	Case	Aluminum Case
7	Sleeve	PET
8	Separator	Electrolyte Paper

CHARACTERISTICS

Standard atmospheric conditions

The standard range of atmospheric conditions for making measurements/test as follows:

Ambient temperature: 15°C to 35°C

Relative humidity: 45% to 85%

Air Pressure: 86kPa to 106kPa

If there is any doubt about the results, measurement shall be made within the following conditions:

Ambient temperature: 20°C ± 2°C

Relative humidity: 60% to 70%

Air Pressure: 86kPa to 106kPa

Operating temperature range

The ambient temperature range at which the capacitor can be operated continuously at rated voltage is

(6.3~100V), -40~+105℃, As to the detailed information, please refer to following table.

<table>
<tr><th>ITEM</th><th>CHARACTERISTICS</th></tr>
<tr><td>Rated Voltage
(WV)/Surge Voltage (SV)</td><td>
<table>
<tr><td>WV (V)</td><td>6.3</td><td>10</td><td>16</td><td>25</td><td>35</td><td>50</td><td>63</td><td>100</td></tr>
<tr><td>SV (V)</td><td>8.0</td><td>13</td><td>20</td><td>32</td><td>44</td><td>63</td><td>79</td><td>125</td></tr>
</table>
</td></tr>
<tr><td>Nominal Capacitance
(Tolerance)</td><td><Condition>
Measuring Frequency : 120Hz±12Hz
Measuring Voltage : Not more than 0.5V
Measuring Temperature : 20±2℃
<Criteria>
Shall be within the specified capacitance tolerance</td></tr>
<tr><td>Leakage Current</td><td><Condition>
After DC Voltage is applied to capacitors through the series protective resistor (1kΩ±10Ω) so that terminal voltage may reach the reacted use voltage. The leakage current when measured in 2 minutes shall not exceed the values of the following equation.
<Criteria>
I (μA)≤0.01CV or 3 (μA) whichever is greater.
I: Leakage current (μA)
C: Capacitance (μF)
V: Rated DC working voltage (V)</td></tr>
<tr><td>tanδ</td><td><Condition>
See Nominal capacitance, for measuring frequency, voltage and temperature.
<Criteria>
<table>
<tr><td>Working voltage (V)</td><td>6.3</td><td>10</td><td>16</td><td>25</td><td>35</td><td>50</td><td>63</td><td>100</td></tr>
<tr><td>Tan δ Max.(%)</td><td>22</td><td>19</td><td>16</td><td>14</td><td>12</td><td>10</td><td>9</td><td>8</td></tr>
</table>
For capacitance value >1000uF, add 0.02 per another 1000uF</td></tr>
</table>

<table>
<tr><th>ITEM</th><th>CHARACTERISTICS</th></tr>
<tr><td>Terminal Strength
IEC-60384-4 4.4</td><td>
<Condition>
Tensile strength of terminals Fixed the capacitor, applied force to the terminal in lead out direction for 10± 1 seconds. Bending strength of terminals. Fixed the capacitor, applied force to bent the terminal (1~4 mm from the rubber) for 90˚ within 2~3 seconds, and then bent it for 90˚ to its original position within 2~3 Seconds.
<table>
<tr><th>Diameter of lead wire</th><th>Tensile force N (kgf)</th><th>Bending force N (kgf)</th></tr>
<tr><td>0.5mm and less</td><td>5 (0.51)</td><td>2.5 (0.25)</td></tr>
<tr><td>Over 0.5mm to 0.8mm</td><td>10 (1.0)</td><td>5 (0.51)</td></tr>
</table>
<Criteria>
No noticeable changes shall be found, no breakage or looseness at the terminal
</td></tr>
<tr><td>Temperature Characteristics
IEC-60384-4 4.12</td><td>
<Condition>
<table>
<tr><th>Step</th><th>Testing temperature(℃)</th><th>Time</th></tr>
<tr><td>1</td><td>20±2</td><td>Time to reach thermal equilibrium</td></tr>
<tr><td>2</td><td>(-40) -25±3</td><td>Time to reach thermal equilibrium</td></tr>
<tr><td>3</td><td>20±2</td><td>Time to reach thermal equilibrium</td></tr>
<tr><td>4</td><td>105±2</td><td>Time to reach thermal equilibrium</td></tr>
<tr><td>5</td><td>20±2</td><td>Time to reach thermal equilibrium</td></tr>
</table>
<Criteria>

At +105℃: capacitance measured shall be within ±20% of its original value at +20℃: tan δ shall be within the limit of tanδ, The leakage current value at +105℃ shall not more than 8 times the specified value.
In step 5, tan δ shall be within the limit of tanδ, The leakage current shall not more than the specified value.
At -40 ℃ (-25 ℃) : Impedance (Z) ratio shall not exceed the following value.

<table>
<tr><td>Rated Voltage (V)</td><td>6.3</td><td>10</td><td>16</td><td>25~100</td></tr>
<tr><td>Z-25℃/ Z +20℃</td><td>4</td><td>3</td><td>2</td><td>2</td></tr>
<tr><td>Z-40℃/ Z +20℃</td><td>8</td><td>6</td><td>4</td><td>3</td></tr>
</table>
Capacitance, tan δ, and impedance shall be measured at 120Hz.
</td></tr>
</table>

ITEM	CHARACTERISTICS
Load Life Test IEC-60384-4 4.13	<Condition> According to IEC60384-4 No.4.13 methods, The capacitor is stored at a temperature of 105±2° C with DC bias voltage plus the rated ripple current for 2000+48/0 hours. (The sum of DC and ripple peak voltage shall not exceed the rated working voltage) Then the product should be tested after 16 hours recovering time at atmospheric conditions. The result should meet the following table:

Φ DX L	6.3V	10~50V	63~100V
≤ϕ6.3	6000H	7000H	6000H
ϕ8x12	8000H	9000H	8000H
ϕ10x12.5	9000H	10000H	10000H
ϕ8x16, ϕ8x20	9000H	10000H	9000H
ϕ10x16, ϕ10x20, ϕ10x25, ≥ϕ12.5	10000H		

<Criteria> :

The characteristic shall meet the following requirements.

Leakage current	Value in 4.2 shall be satisfied
Capacitance Change	Within ±30% of initial value
tanδ	Not more than 300% of the specified value.
Appearance	There shall be no leakage of electrolyte.

ITEM	CHARACTERISTICS
Shelf Life Test IEC-60384-4 4.17	<Condition>: The capacitors are then stored with no voltage applied at a temperature of 105±2℃ for 1000+48/0 hours. Following this period the capacitors shall be removed from the test chamber and be allowed to stabilized at room temperature for 4~8 hours. Next they shall be connected to a series limiting resistor(1k±100Ω) with D.C. rated voltage applied for 30min. After which the capacitors shall be discharged, and then, tested the characteristics. <Criteria> : The characteristic shall meet the following requirements. Leakage current: Value in 4.2 shall be satisfied Capacitance Change: Within ±30% of initial value tanδ: Not more than 300%of the specified value. Appearance: There shall be no leakage of electrolyte. Remark: If the capacitors are stored more than 1 year, the leakage current may increase. Please apply voltage through about 1 K Ω resistor, if necessary.

<table>
<tr><th>ITEM</th><th>CHARACTERISTICS</th></tr>
<tr><td>Surge Test
IEC-60384-4. 4.9</td><td><Condition>
Test temperature:15~35℃; Series resistor: R= (100±50)/C
R: protective resistor (KΩ); C: nominal capacitance (μF)
Test voltage: Surge voltage item 4.4
No. of cycles: 1000cycles Each cycles lasts for 6±0.5min
“ON” for 30±5 s “OFF” for 5±0.5min.
<Criteria>
<table>
<tr><td>Leakage current</td><td>Not more than the specified value</td></tr>
<tr><td>Capacitance Change</td><td>Within ±15% of initial value</td></tr>
<tr><td>tanδ</td><td>Not more than the specified value</td></tr>
<tr><td>Appearance</td><td>There shall be no leakage of electrolyte.</td></tr>
</table>
Attention: This test simulates over voltage at abnormal situation only. It is not applicable to such over voltage as often applied.</td></tr>
<tr><td>Solderability Test
IEC-60384-4 4.6</td><td><Condition>
The capacitor shall be tested under the following conditions: Soldering temperature : 245±3°C; Dipping depth : 2mm ; Dipping speed : 25±2.5mm/s
Dipping time : 3±0.5s
<Criteria>
Coating quality : A minimum of 95% of the surface being immersed</td></tr>
<tr><td>Impedance</td><td><Condition>
Measuring frequency:100kHz;
Measuring temperature:20±2℃
Measuring point: 2mm Max. from the surface of a sealing rubber on the lead wire.
<Criteria>
(20℃)Less than the initial limit(See Point 5).</td></tr>
</table>

<table>
<tr><th>ITEM</th><th>CHARACTERISTICS</th></tr>
<tr><td>Vibration Test
IEC-60384-4.4.8</td><td>
<Condition>
The following conditions shall be applied for 2 hours in each 3 mutually perpendicular directions.
Vibration frequency range : 10Hz ~ 55Hz; Peak to peak amplitude : 1.5mm
Sweep rate : 10Hz ~ 55Hz ~ 10Hz in about 1 minute
Mounting method: The capacitor with diameter greater than 12.5mm or longer than 25mm must be fixed in place with a bracket.
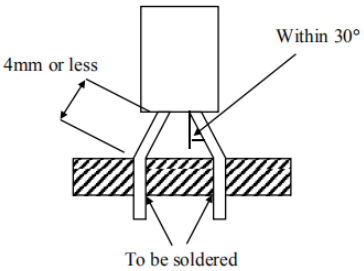

<Criteria> After the test, the following items shall be tested:
<table>
<tr><td>Inner construction</td><td>No intermittent contacts, open or short circuiting. No damage of tab terminals or electrodes</td></tr>
<tr><td>Appearance</td><td>No mechanical damage in terminal. No leakage of electrolyte or swelling of the case. The markings shall be legible</td></tr>
</table>
</td></tr>
<tr><td>Resistance To Solder Heat Test
IEC-60384-4 4.5</td><td>
<Condition>
Terminals of the capacitor shall be immersed into solder bath at 260±5℃ for10±1 seconds or 400±10℃ for 3~4 seconds to 1.5~2.0mm from the body of capacitor. Then the capacitor shall be left under the normal temperature and normal humidity for 1~2 hours before measurement.

<Criteria>
<table>
<tr><td>Leakage current</td><td>Not more than the specified value</td></tr>
<tr><td>Capacitance Change</td><td>Within ±10% of initial value</td></tr>
<tr><td>tanδ</td><td>Not more than the specified value</td></tr>
<tr><td>Appearance</td><td>There shall be no leakage of electrolyte.</td></tr>
</table>
</td></tr>
</table>

<table>
<tr><th>ITEM</th><th>CHARACTERISTICS</th></tr>
<tr><td>Change Of Temperature Test IEC-60384-4 4.7</td><td><Condition> Temperature cycle: According to IEC60384-4 No.4.7 methods, capacitor shall be placed in an oven, the condition according as below:
<table>
<tr><th>Temperature</th><th>Time</th></tr>
<tr><td>(1)+20℃</td><td>≤ 3 Minutes</td></tr>
<tr><td>(2)-40℃</td><td>30±2 Minutes</td></tr>
<tr><td>(3)+105℃</td><td>30±2 Minutes</td></tr>
<tr><td colspan="2">(1) To (3) = 1 cycle, Total 5 Cycles</td></tr>
</table>
<Criteria>
The characteristic shall meet the following requirement.
<table>
<tr><td>Leakage current</td><td>Not more than the specified value.</td></tr>
<tr><td>Tan δ</td><td>Not more than the specified value.</td></tr>
<tr><td>Appearance</td><td>There shall be no leakage of electrolyte.</td></tr>
</table></td></tr>
<tr><td>Damp Heat Test IEC-60384-4 4.12</td><td><Condition>
Humidity test: According to IEC60384-4 No.4.12 methods, capacitor shall be exposed for 500±8 hours in an atmosphere of 90~95%R H .at 40±2℃, the characteristic change shall meet the following requirement.

<Criteria>
<table>
<tr><td>Leakage current</td><td>Not more than the specified value.</td></tr>
<tr><td>Capacitance Change</td><td>Within ±20% of initial value..</td></tr>
<tr><td>tan δ</td><td>Not more than 120% of the specified value.</td></tr>
<tr><td>Appearance</td><td>There shall be no leakage of electrolyte.</td></tr>
</table></td></tr>
</table>

<table>
<tr><th>ITEM</th><th>CHARACTERISTICS</th></tr>
<tr><td>Vent Test
IEC-60384-4 4.16</td><td><Condition>
The following test only apply to those products with vent products at diameter ≥Ø 6.3 with vent.
D.C. test: The capacitor is connected with its polarity reversed to a DC power source. Then a current selected from Table 2 is applied.
<table>
<tr><td>Diameter (mm)</td><td>DC Current (A)</td></tr>
<tr><td>22.4 or less</td><td>1</td></tr>
</table>
<Criteria>
The vent shall operate with no dangerous conditions such as flames or dispersion of pieces of the capacitor and/or case.</td></tr>
</table>

MULTIPLIER FOR RIPPLE CURRENT

Frequency Coefficient

Frequency (Hz) / Coefficient / Cap. (μF)	120	1K	10K	100K
≤270μF	0.50	0.73	0.92	1.00
330~680μF	0.55	0.77	0.94	1.00
820~1800μF	0.60	0.80	0.96	1.00
≥2200μF	0.70	0.85	0.98	1.00

Temperature Coefficient

Ambient Temperature (°C)	105	85	≤70
Coefficient	1.0	1.5	2.0

Cutting The Feet Long

Cutting Length Code	Cutting Length (mm)
CA	3.0±0.5
CB	3.5±0.5
CC	4.0±0.5
CD	4.5±0.5
CE	5.0±0.5
CG	6.0±0.5
And so on……	

Note:

- The length of the product's cut feet starts from A=3.0mm. Every time it increases by 0.5mm.
- The English word is pushed forward one place, as shown in the table.

FORMING DIMENSION - Unit : mm

Cutting Type

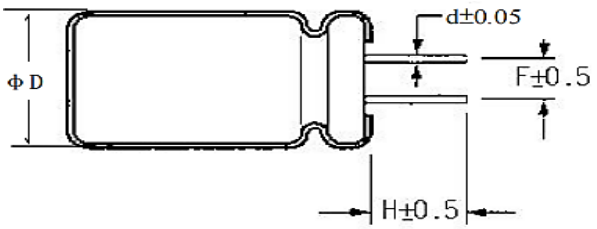

Shape Code	D	5.0	6.3	8.0	10~13	16~18
CB Cutting-3.5mm	F	2.0	2.5	3.5	5.0	7.5
	H	3.5	3.5	3.5	3.5	3.5
	d	0.5	0.5	0.5	0.6	0.8

Shape Code	D	5.0	6.3	8.0	10~13	16~18
CC Cutting-4.0mm	F	2.0	2.5	3.5	5.0	7.5
	H	4.0	4.0	4.0	4.0	4.0
	d	0.5	0.5	0.5	0.6	0.8

Shape Code	D	5.0	6.3	8.0	10~13	16~18
CD Cutting-4.5mm	F	2.0	2.5	3.5	5.0	7.5
	H	4.5	4.5	4.5	4.5	4.5
	d	0.5	0.5	0.5	0.6	0.8

Shape Code	D	5.0	6.3	8.0	10~13	16~18
CE Cutting-5.0mm	F	2.0	2.5	3.5	5.0	7.5
	H	5.0	5.0	5.0	5.0	5.0
	d	0.5	0.5	0.5	0.6	0.8

TAPING DIMENSION - Unit : mm

Taping Code / Item	Symbol	T2	TB		T3	T5	
		Fig 1					
Diameter	D	5	6.3	8		10	12.5/ 13
Height	L	9~30					
Lead Diameter	d±0.05	0.5	0.5/0.6			0.6	
Component Spacing	P±1.0	12.7					15.0
Pitch of sprocket holes	P0±0.2	12.7					15.0
Distance between centers of terminal and the sprocket holes	P1±0.5	5.1		4.6		3.85	
Feed hole center to component center	P2±1.0	6.35					
Distance between centers of component leads	F±0.5	2.0	2.5		3.5	5.0	
Carrier tape width	W±1.0	18					
Hold down tape width	W0	7 Min.					
Distance between the center of upper edge of carrier tape and sprocket hole	W1±0.5	9					
Distance between the upper edges of the carrier tape and the hold down tape	W2	3.0 Max.					
Distance between the abscissa and the bottom of the components body	H±1.0	18.5		20.0		18.5	
Distance between the abscissa and the reference plane of the components with crimped leads	H0±0.5	/					
Max. lateral deviation of the component body vertical to the tape plane	Δh	2.0 Max.					
End of lead	L1	0.5 Max.					
Diameter of driving hole	D0	4.0±0.2					
Sun of thickness for mounting and adhesive tape without lead Diameter	t	0.6±0.3					

TAPING DIMENSION - Unit : mm

Item / Taping Code	Symbol	T5	T7	
		Fig 2		
Diameter	D	12.5/13.0	16	18
Height	L	9~30		
Lead Diameter	d±0.05	0.6	0.8	
Component Spacing	P±1.0	25.4	30.0	
Pitch of sprocket holes	P0±0.2	12.7	15.0	
Distance between centers of terminal and the sprocket holes	P1±0.5	3.85	3.75	
Feed hole center to component center	P2±1.0	6.35	7.50	
Distance between centers of component leads	F±0.5	5.0	7.5	
Carrier tape width	W±1.0	18.0		
Hold down tape width	W0	7.0 Min.		
Distance between the center of upper edge of carrier tape and sprocket hole	W1±0.5	9.0		
Distance between the upper edges of the carrier tape and the hold down tape	W2	3.0 Max.		
Distance between the abscissa and the bottom of the components body	H±1.0	18.5		
Distance between the abscissa and the reference plane of the components with crimped leads	H0±0.5	/		
Max. lateral deviation of the component body vertical to the tape plane	Δh	2.0 Max.		
End of lead	L1	0.5 Max.		
Diameter of driving hole	D0	4.0±0.2		
Sun of thickness for mounting and adhesive tape without lead Diameter	t	0.6±0.3		

TAPING DIMENSION - Unit : mm

Item / Taping Code	Symbol	T5				
		Fig 3				
Diameter	D	4	5		6.3	8
Height	L	5/7		9~12	5/7	9~12	5
Lead Diameter	d±0.05	0.45		0.50	0.45	0.50	0.45
Component Spacing	P±1.0	12.7				
Pitch of sprocket holes	P0±0.2	12.7				
Distance between centers of terminal and the sprocket holes	P1±0.5	3.85				
Feed hole center to component center	P2±1.0	6.35				
Distance between centers of component leads	F±0.5	5.0				
Carrier tape width	W±1.0	18				
Hold down tape width	W0	7 Min.				
Distance between the center of upper edge of carrier tape and sprocket hole	W1±0.5	9				
Distance between the upper edges of the carrier tape and the hold down tape	W2	3.0 Max.				
Distance between the abscissa and the bottom of the components body	H±0.75	17.5				20.0
Distance between the abscissa and the reference plane of the components with crimped leads	H0±0.5	16.0				
Max. lateral deviation of the component body vertical to the tape plane	Δh	2.0 Max.				
End of lead	L1	0.5 Max.				
Diameter of driving hole	D0	4.0±0.2				
Sun of thickness for mounting and adhesive tape without lead Diameter	t	0.6±0.3				

TAPING DIMENSION - Unit : mm

Item / Taping Code	Symbol	TB			T5		
		Fig 4			Fig 3		
Diameter	D	4	5		8		
Height	L	5/7		9~12	7	9~19	20~25
Lead Diameter	d±0.05	0.45		0.50	0.45	0.50	0.60
Component Spacing	P±1.0	12.7					
Pitch of sprocket holes	P0±0.2	12.7					
Distance between centers of terminal and the sprocket holes	P1±0.5	5.1			4.6		
Feed hole center to component center	P2±1.0	6.35					
Distance between centers of component leads	F±0.5	2.5		3.5	5.0		
Carrier tape width	W±1.0	18					
Hold down tape width	W0	7 Min.					
Distance between the center of upper edge of carrier tape and sprocket hole	W1±0.5	9					
Distance between the upper edges of the carrier tape and the hold down tape	W2	3.0 Max.					
Distance between the abscissa and the bottom of the components body	H±0.75	18.5			20.0		
Distance between the abscissa and the reference plane of the components with crimped leads	H0±0.5	-			16.0		
Max. lateral deviation of the component body vertical to the tape plane	Δh	2.0 Max.					
End of lead	L1	0.5 Max.					
Diameter of driving hole	D0	4.0±0.2					
Sun of thickness for mounting and adhesive tape without lead Diameter	t	0.6±0.3					

STRAIGHT FOOT BRAID

Fig 1

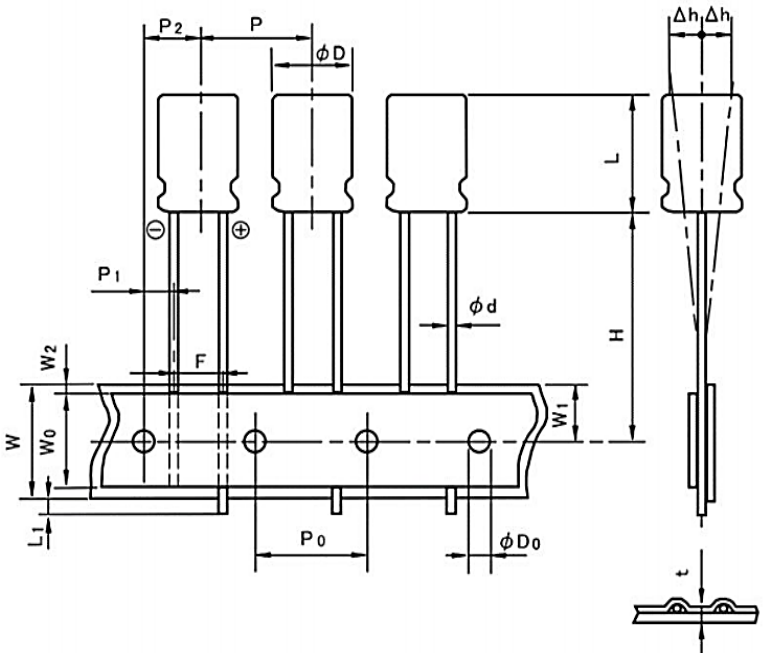

Fig 2

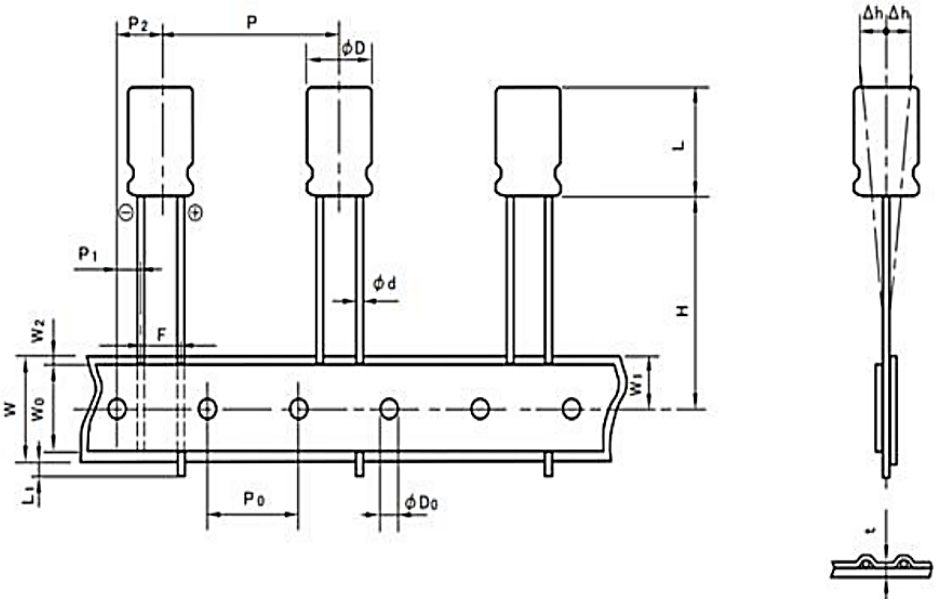

STRAIGHT FOOT BRAID

Fig 3

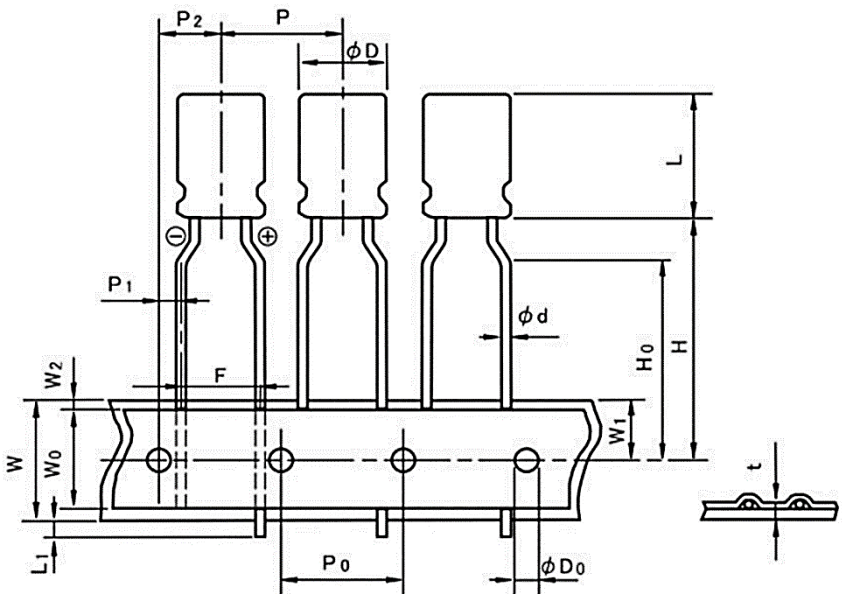

Fig 4

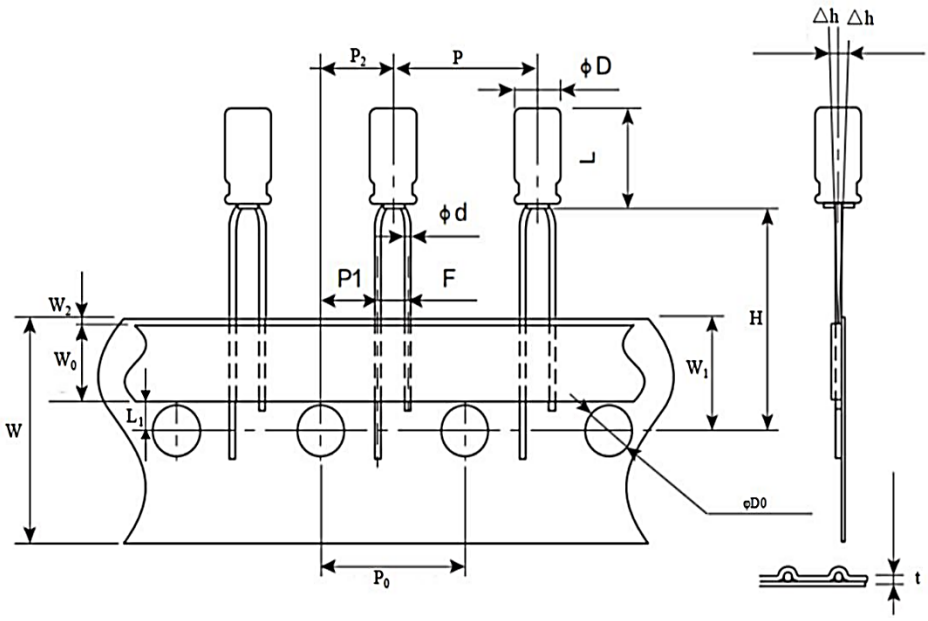

T5 D12.5mm YPE TAPING DIMENSION STRAIGHT FOOT BRAID (Unit: mm)

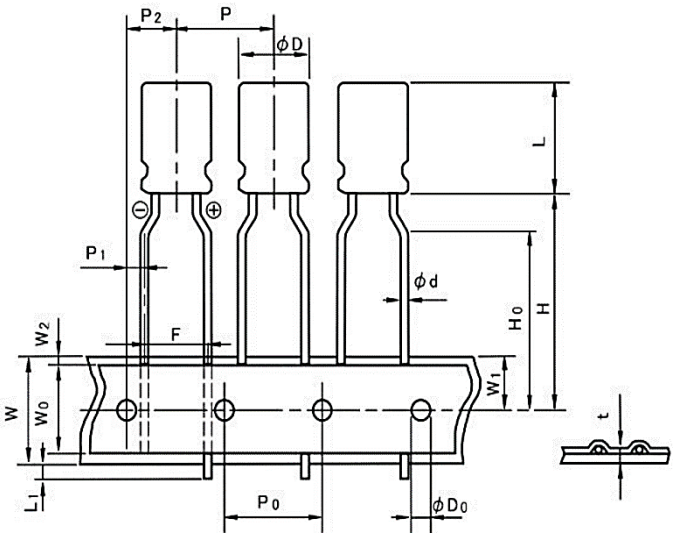

SYMBOL	DIMENSION	TOLERANCE
ΦD	10	-
L	12.5	-
d	0.6	±0.05
P	12.7	±1.0
P0	12.7	±0.2
P1	3.85	±0.5
P2	6.35	±1.0
F	5.0	±0.5
F2	-	±0.8
W	18	±1.0
W0	7	-
W1	9.0	±0.5
W2	3.0 Max.	-
H	18.5	±1.0
L1	-	-
D0	4.0	±0.2
Δh	2.0 Max.	-
t	/	/

ATTENTION

When using Aluminum Electrolytic Capacitor, please pay attention to the points listed below. If the following types of electrical loads are applied to Aluminum Electrolytic Capacitor, rapid deterioration of electrical property occurs:

- Reverse voltage
- Overvoltage exceeding rated working voltage
- Current exceeding rated ripple current
- Severe charging/discharging

At such times, severe heat is generated, gas is emitted ,then electrolyte leaks from the sealed area, and pressure relief vent operates due to increase of internal pressure. In the worst case, explosion or ignition may occur, and along with destruction of the capacitor combustibles may burst out.

CAUTION DURING CIRCUIT DESIGN

1. Operational environments, mounting environment and conditions. Ensure that operational and mounting conditions follow the specified conditions detailed in the catalog and specification sheets
2. Operating temperature, ripple current and load life. Operating temperature and applied ripple current should be within the specified value in the catalog or specification sheets. Do not use Aluminum Electrolytic Capacitors at temperature which exceeds the specified category temperatures range. Do not apply excessive current to the capacitors, which exceeds the specified rated ripple current. During circuit design ,please ensure that capacitors are selected to match with the lifetime requirements of the application
3. Application: Aluminum Electrolytic Capacitors are normally polarized .Reverse voltage or AC Voltage should not be applied. When polarity may flip over, non-polar type should be used, but the non-polar type cannot be used for AC. Standard Aluminum Electrolytic Capacitors are not suitable for rapid charge and discharge applications. Group in your area about specialty signed capacitors for rapid charge and discharge.
4. Applied Voltage: Do not exceed the rated voltage of capacitors

5. Insulation: Aluminum Electrolytic Capacitors should be electrically isolated from the following. Aluminum case, cathode lead wire, anode lead wire and circuit pattern; Auxiliary terminals of snap-in type, anode terminal, outward terminals and circuit pattern. The PVC sleeve of Aluminum Electrolytic Capacitors is not recognized as an insulator, and therefore ,the standard capacitor should not be used in a place where insulation function is needed. Please consult with NextGen Components, Inc. if you require a higher grade of insulating sleeve.
6. Conditions of use: The following environments should be avoided when suing Aluminum Electrolytic Capacitors. Damp conditions such as water ,salt water or oil spray or fumes, high humidity or humidity condensation situations. Hazardous gas/fumes such as hydrogen sulfide, sulfurous acid gas, nitrous acid, chlorine gas, ammonia or bromine gas; Exposure of ozone ,ultraviolet rays or radiation; Severe vibration or shock which exceeds the condition specified in the catalog or specification sheet.
7. Consideration to assembly condition: In designing a circuit ,the following matters should be ensured in advance to the capacitor's assembly on the printed circuit board (PC board) Design the appropriate hole spacing to match the lead pitch of capacitors; Do not locate any wiring and circuit patterns directly above the capacitor's vent; Ensure enough free space above the capacitor's vent. The recommended space is specified in the catalog or specification sheets; In case the capacitor's vent is facing the PC board, make a gas release hole on PC board. The sealing side of the screw terminal type should not face down in the application. When the capacitors are mounted horizontally, the anode screw terminals must be positioned at upper side.
8. Consideration to circuit design: Any copper lines or circuit patterns should not be laid under the capacitor; Parts which radiate heat should not be placed close to the reverse side of the Aluminum Electrolytic Capacitors on the PC board.

9. Others

Performance of electrical characteristics of Aluminum Electrolytic Capacitors is affected by variation of operating temperature and frequency. Consider this variation when designing the circuit. Excessive holes and connection hole between both sides on the PC board should be avoided around or under the mounting area of the Aluminum Electrolytic Capacitors on double sided or multilayer PC board. Torque of tightening screw terminals should not exceed the specified maximum value which is described in the catalog and specification sheets . Consider current balance when 2 or more Aluminum Electrolytic Capacitors are connected in parallel. Use bleeding resistors when 2 or more Aluminum Electrolytic Capacitors are connected in series .In this case, the resistors should be connected parallel to the capacitors.

CAUTION FOR ASSEMBLING CAPACITORS

1. Caution before assembly : Aluminum Electrolytic Capacitors cannot be recycled after mounting and applying electricity in unit. The capacitors, which are removed from PC board for the purpose of measuring electrical characteristics at the periodical inspection, should only be recycled for the same position.; Aluminum Electrolytic Capacitors may accumulate charge naturally during storage. In this case, discharge through a 1KOHM resistor before use; Leakage current of Aluminum Electrolytic Capacitors may be increased during long storage time. In this case, the capacitors should be subject to voltage treatment through a 1KOHM resistor before use.
2. In the assembly process-1: Ensure rated voltage and capacitance of the capacitors before mounting; Ensure capacitors polarity before mounting; Do not use a capacitor which has been dropped onto a hard surface; Do not use a capacitor with damaged or dented cased or seals.
3. In the assembly process-2: Capacitors should be mounted after confirmation that hole spacing on PC board matches the lead pitch of the capacitors; The snap-in type of capacitors should be mounted firmly on the PC board without a gap between the capacitor body and the surface of PC board;. Avoid excessive force when clinching lead wire during auto-insertion process; Avoid excessive shock to capacitors by automatic inserting machine, during mounting, parts inspection or centering operations; Please utilize supporting material such as strap of adhesive to mount capacitors to PC board when it is anticipated that vibration or shock is applied.

4. Soldering: Soldering conditions (temperature and time)should be within the specified conditions which are described in the catalog or specification sheets; In case lead wire reforming is needed due to inappropriate pitch between capacitor and holes on PC board, stress to the capacitor should be avoided; In case of maintenance by soldering iron, if it is required to detach the capacitor, it should be removed from PC board after solder has melted sufficiently in order to reduce stress on the lead wires/terminals of the capacitor; Soldering iron should never touch the capacitor's body.
5. Flow soldering: Do not dip capacitor's body into melted solder. It should only be soldered on the reverse side of the PC board on which the capacitors are mounted; Soldering condition (preheat, soldering temperature, dipping time)should be within the specified standard which is described in the catalog or specification sheets; Flux should not be adhered to capacitor's body but only to its terminals; Other devices which are mounted close to capacitors should not touch the capacitors.
6. Reflow soldering: Reflow soldering conditions(preheat, soldering, temperature, reflow time)should follow the specified standard which is described in the catalog or specification sheets; Heating standard should depend on surface of the capacitor color or materials when infrared rays are used because the capacitor's heat absorption depends on the surface color or materials. Check heat condition; Standard Aluminum Electrolytic Capacitors cannot withstand two or more reflow processes.
7. Handling after soldering: Do not bend or twist the capacitor's body after soldering on PC board; Do not pick-up or move PC board by holding the soldered capacitors; Do not hit the capacitors and isolate capacitors from the PC board or other device when stacking PC boards in store.
8. PC board cleaning: Standard Aluminum Electrolytic Capacitors should be free from halogenated solvents during PC board cleaning after soldering
9. Adhesives and coating materials: Do not use halogenated adhesives and coating materials to fix Aluminum Electrolytic Capacitors; Flux between the surface of the PC board and sealing of capacitors should be cleaned before using adhesives or coating materials; Solvents should be dried up before using adhesives or coating materials; Do not cover up all the sealing area of capacitors with adhesives or coating materials, make coverage only partial.

CAUTION DURING USE OF CAPACITORS IN SETS

1. Do not touch the terminals of capacitors;
2. Do not connect electrical terminals of the capacitors. Keep the capacitors free from conductive solution, such as acid, alkali and so on;
3. Ensure the operational environment of the equipment in which the capacitor has been built is within the specified condition mentioned in the catalog or specification sheets.

MAINTENANCE

1. Periodical inspection should be carried out for the capacitors, which are used with industrial equipment. Check the following points at the inspection.
2. Visual inspection to check pressure relief vent open or leakage of electrolyte.
3. Electrical characteristics: leakage current, capacitance, dissipation factor and the other points which are mentioned in the catalog or specification sheets.

EMERGENCY ACTION

1. If the pressure relief vent is open and some gas blows out from the capacitor, turn the main switch of the equipment off or pull out the plug from the power outlet immediately.
2. During pressure relief vent operation, extremely hot gas (over 100℃)may blow out from the vent area of the capacitors. So keep your face and skin away from capacitors during its operation. In case of eye contact, flush the open eye(s)with large amount of clean water immediately. In case of ingestion, gargle with water immediately, and do not swallow .Also do not touch electrolyte but wash skin with soap and water in case of skin contact.

STORAGE CONDITIO

1. Aluminum Electrolytic Capacitors should not be stored in high temperature or in high humidity. The suitable storage condition is 5℃-35℃,and less than 75% in relative humidity;
2. Aluminum Electrolytic Capacitors should not be stored in damp conditions such as water, salt water spray or oil spray.

3. Do not store Aluminum Electrolytic Capacitors in an environment full of hazardous gas (hydrogen sulfide gas, sulfurous acid gas, nitrous acid, chlorine gas, ammonia or bromine gas.
4. Aluminum Electrolytic Capacitors should not be stored under exposure to ozone ,ultraviolet rays or radiation.
5. After one year, a capacitor should be reconditioned by applying rated voltage in series with a 1000Ω current limiting resistor for a time period of 30 minutes.

DISPOSAL

Please take either of the following actions in case of disposal. Incineration (high temperature of more than 800℃) after crushing the capacitor's body; Consignment to specialists of industrial waste.

ROHS COMPLIANCE

The levels of RoHS restricted materials in this product are below the maximum concentration values (also referred to as the threshold limits) permitted for such substances, or are used in an exempted application, in accordance with EU RoHS Directive (EU) 2015/863 EC (RoHS3). RoHS Test Report for this product can be obtained can be obtained at Download Center.

REACH COMPLIANCE

REACH substances of high concern (SVHCs) information is available for this product. Since the European Chemical Agency (ECHA) has published notice of their intent to frequently revise the SVHC listing for the foreseeable future, REACH Test Report for this product can be obtained can be obtained at Download Center.

IMPORTANT NOTES AND DISCLAIMER

1. All Product parametric performance is indicated in the Electrical Characteristics for the listed herein test conditions, unless otherwise noted. Product performance may not be indicated by the Electrical Characteristics if operated under different conditions.
2. NextGen Component, Inc (*NextGen*) reserves the right to make changes to this document and its products and specifications at any time without notice. Customers should obtain and confirm the latest product information and specifications before final design, purchase or use.
3. *NextGen* makes no warranty, representation or guarantee regarding the suitability of its products for any particular purpose, not does NextGen assume any liability for application assistance or customer product design.
4. *NextGen* does not warrant or accept any liability with products which are purchased or used for any unintended or unauthorized application. No license is granted by implication or otherwise under any intellectual property rights of *NextGen.*
5. *NextGen* products are not authorized for use as critical components in life support devices or systems without express written approval by *NextGen.*
6. *NextGen* requires that customers first obtain an RMA (Returned Merchandise Authorization) number prior to returning any products. Returns must be made within 30 days of the date of invoice, be in the original packaging, unused and like-new condition. At the time of quoting or purchasing, a product may say that it is Non-Cancelable/ Non-Returnable (NCNR). These products are not returnable and not refundable.