REVISIONS			
REV	DESCRIPTION	DATE	APPROVED
A	INITIAL RELEASE	2024.01.05	Yeong

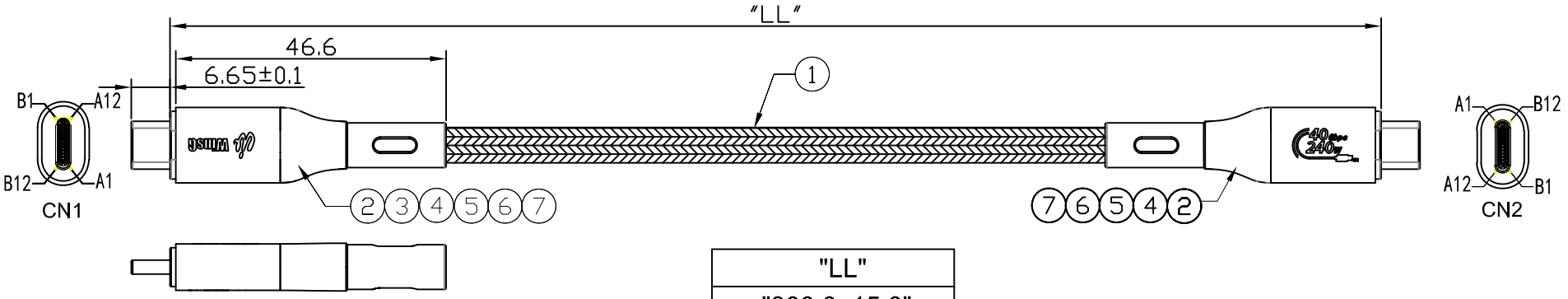

"LL"
"300.0±15.0"
"1000.0±30.0"
"2000.0±50.0"

PIN Assignment

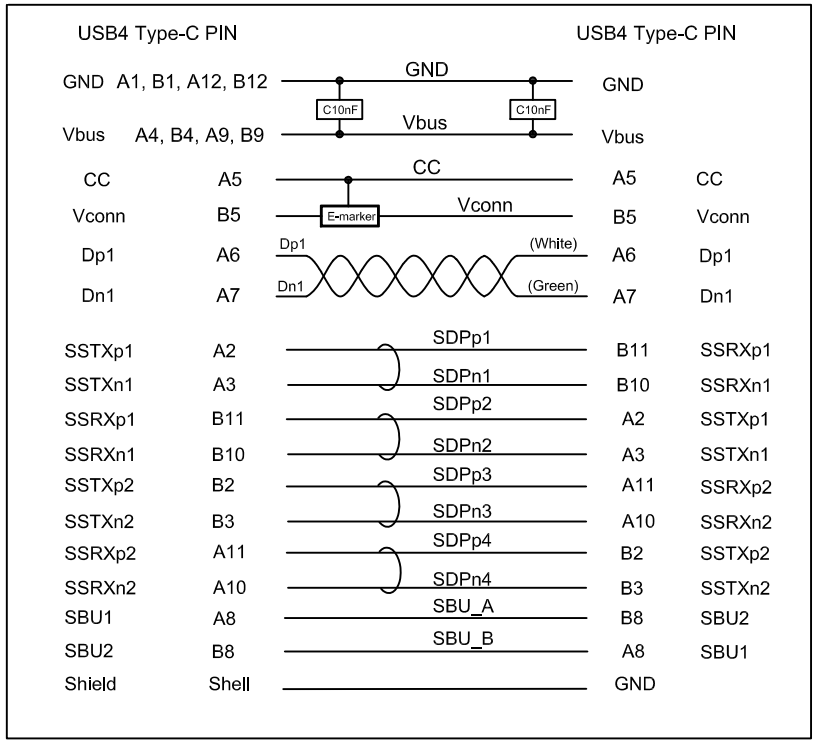

Item		MATERIAL DESCRIPION	Q'TY	UNIT
7	Aluminum	Aluminum shell,Plate Gray,L:18*W:13*H:8mm	2	PCS
6	Outer Molding	85 A TPE,Black.	12	G
5	Inner Molding	LD-PE ROHS.	2	G
4	Shell covered	with tinplate covered.	2	SET
3	E-Mark	E-marker: VL 153B.	1	PCS
2	Conn	USB4 Type-C Plug,Nickel-Plated	2	PCS
1	USB4 Cable	{(30AWG*1 C+SCUM)*8C+[(33AWG*1 P)+(26AWGx2C)+FOIL] +(34AWG*4C)}+PAPER+BRAID OD= 4.7MM, TPE, Black +Nylon Braid Black.	A/R	MM

X ±10	X° ±5	NAME: W1	FULLTIME PLASTIC & METAL ELECTRONICS LIMITED CORP	
.X ±5	.X° ±2			
.XX ±2	.XX° ±1	UNITS: MM	PART NO.: FTU440G240W-LL-001	TITLE: USB TYPE C TO C 4.0 GEN3,240W
				RFQ NO.: FTU440G240W-LL-001
		Yeong 2024.01.05		SCALE: NONE / SHEET: 1/1 / REV.: A
		APPD BY	CHECK BY	DRAWN BY

RoHS COMPLIANT