1SNG618005R0000 ✔ ACTIVE

ENTRELEC

TE Internal #: 1SNG618005R0000

Cable Gland, RJ45 Type, PA6, 3. - 6. mm Clamping Range, Gray, IP68

View on TE.com >

Wire Protection & Management > Cable Glands > RJ45 Plastic Cable Glands

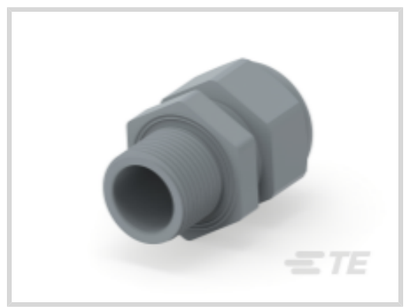
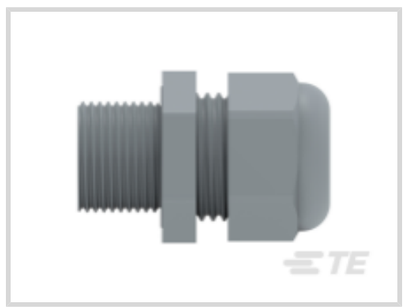




Cable Gland Product Type: **Cable Gland**

Cable Gland & Accessory Style: **RJ45 Type**

Primary Product Material: **PA6**

Clamping Diameter Range: **3. - 6. mm**

Primary Product Color: **Gray**

All RJ45 Plastic Cable Glands (24)

Features

Product Type Features

Cable Gland Product Type	Cable Gland
Cable Gland & Accessory Style	RJ45 Type
Sealable	Yes

Body Features

Primary Product Material	PA6
Primary Product Color	Gray

Dimensions

Clamping Diameter Range	3. - 6. mm
Outer Thread Size	M20 x 1.5
Thread Length	15 mm

Usage Conditions

Operating Temperature Range	-20 - 100 °C[-4 - 212 °F]

Industry Standards

UL Flammability Rating	UL 94V-2
IP Rating	IP68

Packaging Features

Packaging Method	Bag

Product Compliance

For compliance documentation, visit the product page on TE.com>

EU RoHS Directive 2011/65/EU	Compliant
EU ELV Directive 2000/53/EC	Compliant
China RoHS 2 Directive MIIT Order No 32, 2016	No Restricted Materials Above Threshold
EU REACH Regulation (EC) No. 1907/2006	Current ECHA Candidate List: JAN 2024 (240) Candidate List Declared Against: JAN 2023 (233) Does not contain REACH SVHC
Halogen Content	Not Yet Reviewed for halogen content
Solder Process Capability	Not reviewed for solder process capability

Product Compliance Disclaimer

This information is provided based on reasonable inquiry of our suppliers and represents our current actual knowledge based on the information they provided. This information is subject to change. The part numbers that TE has identified as EU RoHS compliant have a maximum concentration of 0.1% by weight in homogenous materials for lead, hexavalent chromium, mercury, PBB, PBDE, DBP, BBP, DEHP, DIBP, and 0.01% for cadmium, or qualify for an exemption to these limits as defined in the Annexes of Directive 2011/65/EU (RoHS2). Finished electrical and electronic equipment products will be CE marked as required by Directive 2011/65/EU. Components may not be CE marked. Additionally, the part numbers that TE has identified as EU ELV compliant have a maximum concentration of 0.1% by weight in homogenous materials for lead, hexavalent chromium, and mercury, and 0.01% for cadmium, or qualify for an exemption to these limits as defined in the Annexes of Directive 2000/53/EC (ELV). Regarding the REACH Regulation, the information TE provides on SVHC in articles for this part number is based on the latest European Chemicals Agency (ECHA) 'Guidance on requirements for substances in articles' posted at this URL: https://echa.europa.eu/guidance-documents/guidance-on-reach

Compatible Parts



TE Part # CAT-AB0-E1618
RJ45 Plastic Cable Glands

Customers Also Bought



TE Part # DT04-2P
REC, 2P, GRY, N

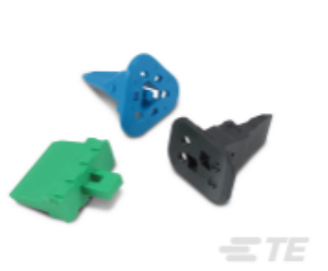

TE Part # W2S
Wedgelocks: DEUTSCH DT



TE Part # 0460-202-16141
DEUTSCH Solid Contacts



TE Part # 282104-1
AMP SUPERSEAL 1.5MM, CONNECTOR HOUSING



TE Part # DT06-2S
PLG, 2P, GRY, N

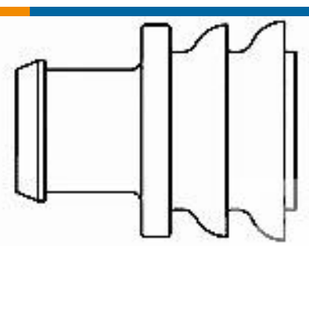

TE Part # 281934-2
SINGLE WIRE SEAL



TE Part # 114017-ZZ
SEALING PLUG, SIZE 12/16, WHT

Documents

Product Drawings

EP-RJG-M20-GR-B

English

EP-RJG-M20-GR-B

English

CAD Files

3D PDF

3D

Customer View Model

ENG_CVM_CVM_1SNG618005R0000_A.2d_dxf.zip

English

Customer View Model

ENG_CVM_CVM_1SNG618005R0000_A.3d_igs.zip

English

Customer View Model

ENG_CVM_CVM_1SNG618005R0000_A.3d_stp.zip

English

By downloading the CAD file I accept and agree to the Terms and Conditionsof use.

Datasheets & Catalog Pages

Catalog - ENTRELEC Cable Glands

English

Agency Approvals

UL

English

UL

English