2388171-2 ✔ ACTIVE

TE Internal #: 2388171-2

Housing for Male Terminals, Wire-to-Wire, 4 Position, .315 in [8 mm] Centerline, Gray, Wire & Cable, Power & Signal, Panel Mount

View on TE.com >

Connectors > Automotive Connectors > Automotive Housings

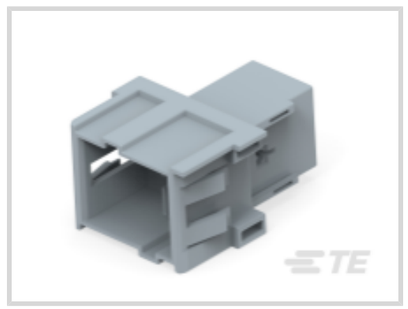





Connector System: **Wire-to-Wire**

Number of Positions: **4**

Connector & Housing Type: **Housing for Male Terminals**

Centerline (Pitch): **8 mm [.315 in]**

Sealable: **No**

Features

Product Type Features

Mixed & Hybrid Connector	No
Connector Shape	Rectangular
Connector System	Wire-to-Wire
Connector & Housing Type	Housing for Male Terminals
Sealable	No
Connector & Contact Terminates To	Wire & Cable
Primary Locking Feature	Locking Lance

Configuration Features

Number of Positions	4
Number of Rows	2

Electrical Characteristics

Nominal Voltage Architecture	24 V

Body Features

Primary Product Color	Gray
Connector & Keying Code	B

Contact Features

Contact Size	6.3K
Mating Tab Width	5.8 mm[.228 in]

Mechanical Attachment

Mating Alignment Type	Keyed
Mating Alignment	With
Connector Mounting Type	Panel Mount

Housing Features

Centerline (Pitch)	8 mm[.315 in]

Usage Conditions

Operating Temperature (Max)	120 °C[248 °F]
Operating Temperature Range	-40 - 120 °C[-40 - 248 °F]

Operation/Application

Circuit Application	Power & Signal

Industry Standards

UL Flammability Rating	UL 94HB

Other

Connector Position Assurance Capable	No

Product Compliance

For compliance documentation, visit the product page on TE.com>

EU RoHS Directive 2011/65/EU	Compliant
EU ELV Directive 2000/53/EC	Compliant
China RoHS 2 Directive MIIT Order No 32, 2016	No Restricted Materials Above Threshold
EU REACH Regulation (EC) No. 1907/2006	Current ECHA Candidate List: JAN 2024 (240) Candidate List Declared Against: JAN 2024 (240) Does not contain REACH SVHC
Halogen Content	Low Halogen - Br, Cl, F, I < 900 ppm per homogenous material. Also BFR/CFR/PVC Free
Solder Process Capability	Not reviewed for solder process capability

Product Compliance Disclaimer

This information is provided based on reasonable inquiry of our suppliers and represents our current actual knowledge based on the information they provided. This information is subject to change. The part numbers that TE has identified as EU RoHS compliant have a maximum concentration of 0.1% by weight in homogenous materials for lead, hexavalent chromium, mercury, PBB, PBDE, DBP, BBP, DEHP, DIBP, and 0.01% for cadmium, or qualify for an exemption to these limits as defined in the Annexes of Directive 2011/65/EU (RoHS2). Finished electrical and electronic equipment products will be CE marked as required by Directive 2011/65/EU. Components may not be CE marked. Additionally, the part numbers that TE has identified as EU ELV compliant have a maximum concentration of 0.1% by weight in homogenous materials for lead, hexavalent chromium, and mercury, and 0.01% for cadmium, or qualify for an exemption to these limits as defined in the Annexes of Directive 2000/53/EC (ELV). Regarding the REACH Regulation, the information TE provides on SVHC in articles for this part number is based on the latest European Chemicals Agency (ECHA) 'Guidance on requirements for substances in articles' posted at this URL: https://echa.europa.eu/guidance-documents/guidance-on-reach

Compatible Parts



TE Part # 2388168-1
TPA REC HSG,4POS,AMP MCP 6.3/4.8K

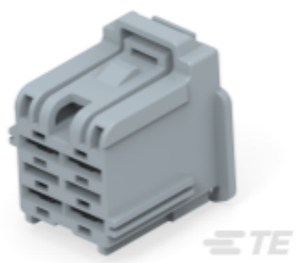

TE Part # 2388170-2
4POS,AMP MCP 6.3/4.8K,REC HSG, UNSLD

Customers Also Bought



TE Part # DT04-2P
REC, 2P, GRY, N



TE Part # W2S
Wedgelocks: DEUTSCH DT



TE Part # 0460-202-16141
DEUTSCH Solid Contacts



TE Part # 282104-1
AMP SUPERSEAL 1.5MM, CONNECTOR HOUSING



TE Part # DT06-2S
PLG, 2P, GRY, N

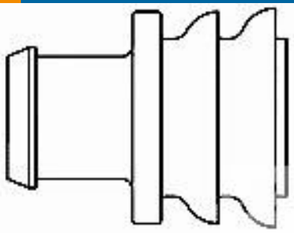

TE Part # 281934-2
SINGLE WIRE SEAL



TE Part # 114017-ZZ
SEALING PLUG, SIZE 12/16, WHT

Documents

Product Drawings

4POS,AMP MCP 6.3/4.8K,TAB HSG,UNSLD

English

CAD Files

3D PDF

3D

Customer View Model

ENG_CVM_CVM_2388171-2_A.2d_dxf.zip

English

Customer View Model

ENG_CVM_CVM_2388171-2_A.3d_igs.zip

English

Customer View Model

ENG_CVM_CVM_2388171-2_A.3d_stp.zip

English

By downloading the CAD file I accept and agree to the Terms and Conditionsof use.

Product Specifications

Product Specification

English