A 0 6 X X X

RODZAJ POLACZENIA/INTERNAL CIRQUIT

PATRZ SCHEMATY POLACZEN/WIREING CONFIGURATION

NAPIECIE ORAZ KOLOR DIODY/VOLTAGE AND LED COLOUR:

1= 12V	A= 12V	G= 12V
2= 24V	B= 24V	H= 24V
3= 48V	C= 48V	K= 48V
4= 115V	D= 115V	L= 115V
5= 230V	E= 230V	M= 230V
CZERWONA DIODA RED LED	ZIELONA DIODA GREEN LED	ZOLTA DIODA YELLOW LED

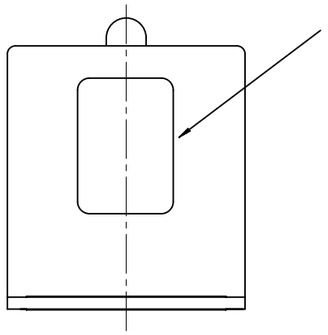

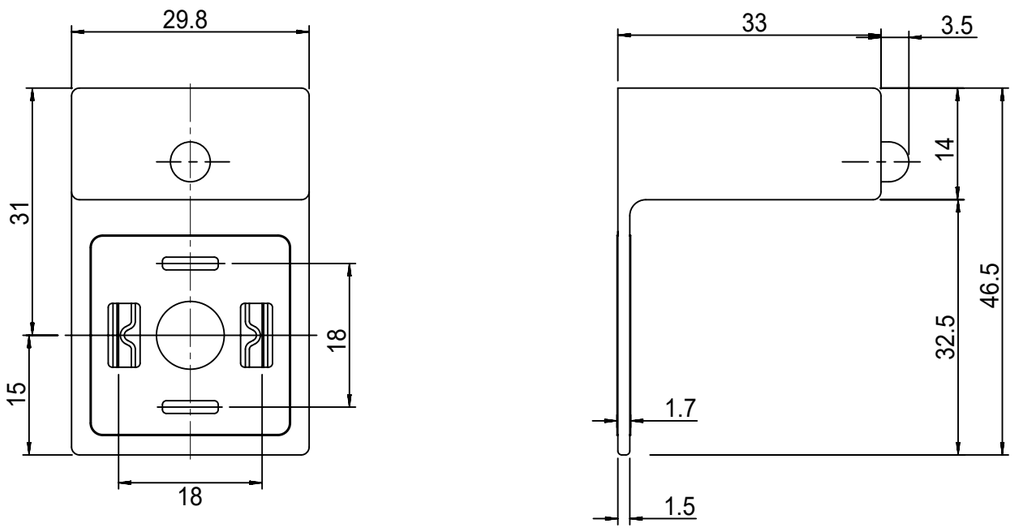

MOLEX PN	MPM PN
1210010190	A06A12
1210010194	A06A1B
1210010197	A06A1H
1210010202	A06C32
1210010206	A06C3B
1210010207	A06C3H
1210010210	A06C42
1210010212	A06C44
1210010213	A06C45
1210010214	A06C4B

MOLEX PN	MPM PN
1210010217	A06C4E
1210010219	A06C4H
1210010220	A06C4L
1210010221	A06C4M
1210010223	A06G22
1210010226	A06G25
1210010231	A06G2H
1210010233	A06G2L
1210010234	A06G2M
1210010236	A06S02
1210010240	A06S0H

SCHEMATY POLACZEN

/WIREING CONFIGURATION

SCHEMAT ELEKTRYCZNY ELECTRICAL DIAGRAM A1

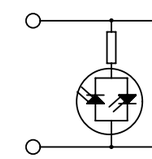

SCHEMAT ELEKTRYCZNY ELECTRICAL DIAGRAM C3

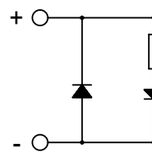

SCHEMAT ELEKTRYCZNY ELECTRICAL DIAGRAM C4

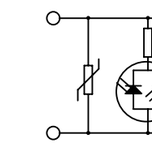

SCHEMAT ELEKTRYCZNY ELECTRICAL DIAGRAM G2

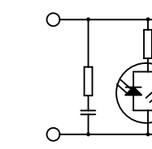

SCHEMAT ELEKTRYCZNY ELECTRICAL DIAGRAM S0

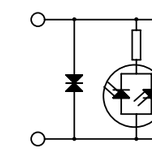

THIS DRAWING CONTAINS INFORMATION THAT IS PROPRIETARY TO MOLEX ELECTRONIC TECHNOLOGIES, LLC AND SHOULD NOT BE USED WITHOUT WRITTEN PERMISSION

DIMENSION UNITS: MM	SCALE: NTS	CURRENT REV DESC: REMOVED OBSOLETED PART NUMBERS AS PER PCN#511691.	molex
GENERAL TOLERANCES (UNLESS SPECIFIED)	MM / INCH	EC NO: 737858	MPM A06 ADAPTORS
4 PLACES	± / ±	DRWN: SANTHN 2023/02/08	PRODUCT CUSTOMER DRAWING
3 PLACES	± / ±	CHK'D: GGA 2023/02/24	DOCUMENT NUMBER: A06XXX; DOC TYPE: PSD; DOC PART: 001; REVISION: A1
2 PLACES	± / ±	APPR: GGA 2023/02/24	
1 PLACE	± / ±	INITIAL REVISION:	
0 PLACES	± / ±	DRWN: MLEVYTSKYY 2009/05/05	
ANGULAR TOL	± °	APPR: MWOLSZCZAK 2009/05/05	
DRAFT WHERE APPLICABLE MUST REMAIN WITHIN DIMENSIONS	THIRD ANGLE PROJECTION	DRAWING: A3-SIZE; SERIES: 121001	MATERIAL NUMBER: SEE TABLE; CUSTOMER: GENERAL MARKET; SHEET NUMBER: 1 OF 1

DOCUMENT STATUS	P1	RELEASE DATE	2023/02/24 09:13:04

FORMAT: Met-lega-master-tb-prod-A3
REVISION: E1
DATE: 2021/05/01

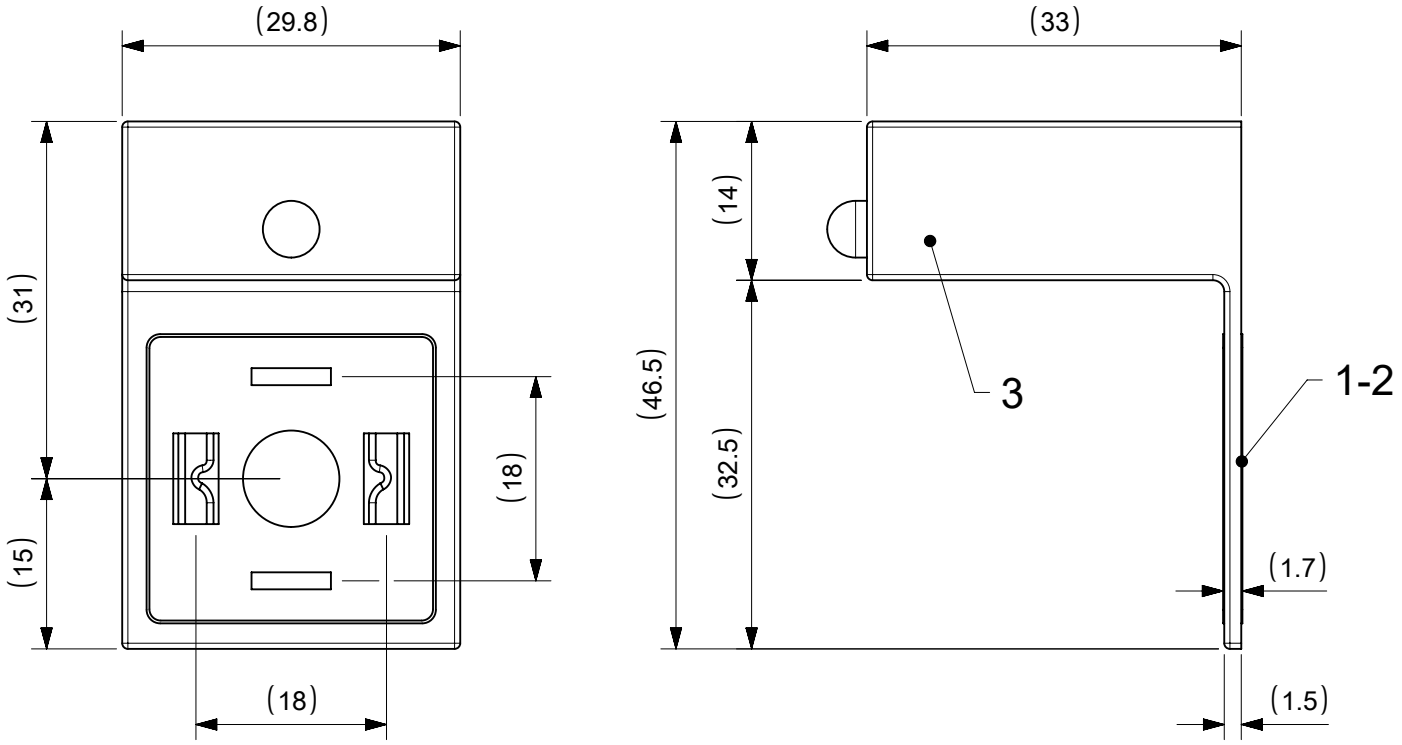

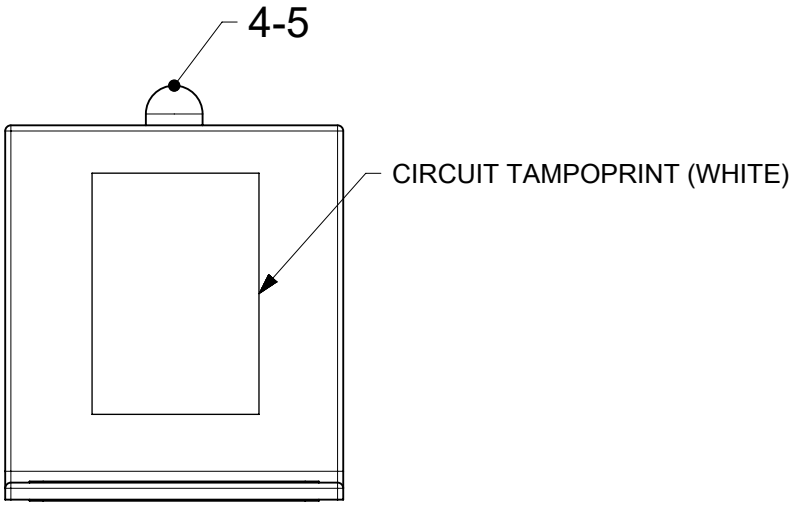

SCHEMATY POŁĄCZEŃ/ *WIRING CONFIGURATION*

SCHEMAT ELEKTRYCZNY A1
ELECTRICAL DIAGRAM A1

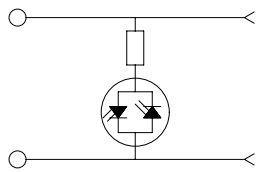

SCHEMAT ELEKTRYCZNY C3
ELECTRICAL DIAGRAM C3

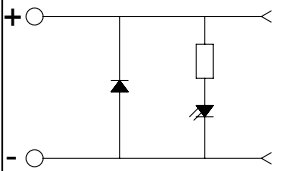

SCHEMAT ELEKTRYCZNY C4
ELECTRICAL DIAGRAM C4

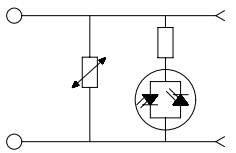

SCHEMAT ELEKTRYCZNY G2
ELECTRICAL DIAGRAM G2

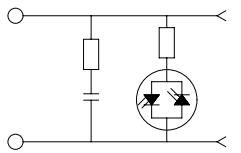

SCHEMAT ELEKTRYCZNY S0
ELECTRICAL DIAGRAM S0

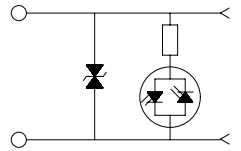

THIS DRAWING CONTAINS INFORMATION THAT IS PROPRIETARY TO MOLEX ELECTRONIC TECHNOLOGIES, LLC AND SHOULD NOT BE USED WITHOUT WRITTEN PERMISSION

DIMENSION UNITS	SCALE
mm	1:1

GENERAL TOLERANCES (UNLESS SPECIFIED)

ANGULAR TOL	± °
4 PLACES	±
3 PLACES	±
2 PLACES	±
1 PLACE	±
0 PLACES	±

DRAFT WHERE APPLICABLE MUST REMAIN WITHIN DIMENSIONS

CURRENT REV DESC: REMOVED OBSOLETED PART NUMBER AS PER PCN#511691.

EC NO: 737858

DRWN:	SANTHN	2023/02/10
CHK'D:	GGA	2023/02/24
APPR:	GGA	2023/02/24

INITIAL REVISION:

DRWN:	JMARSZALEK	2013/02/11
APPR:	MIWASIECZKO	2013/02/12

molex

LIGHTS ADAPTORS
SERIES A06XXX FOR DIN A

PRODUCT CUSTOMER DRAWING

DOCUMENT NUMBER	DOC TYPE	DOC PART	REVISION
SD-121001-006	PSD	001	A2

THIRD ANGLE PROJECTION	DRAWING	SERIES	MATERIAL NUMBER	CUSTOMER	SHEET NUMBER
	A4-SIZE	121001	SEE PART LIST	GENERAL MARKET	1 OF 2

DOCUMENT STATUS	P1	RELEASE DATE	2023/02/24 09:13:39

FORMAT: master-tb-prod-A4
REVISION: J1
DATE: 2021/05/01

PART LIST

MOLEX PN	ENG. NO	CIRCUIT TYPE	LED COLOR
1210010190	A06A12	A1 24V	RED
1210010194	A06A1B	A1 24V	GREEN
1210010197	A06A1H	A1 24V	YELLOW
1210010202	A06C32	C3 24V	RED
1210010206	A06C3B	C3 24V	GREEN
1210010207	A06C3H	C3 24V	YELLOW
1210010210	A06C42	C4 24V	RED
1210010212	A06C44	C4 115V	RED
1210010213	A06C45	C4 230V	RED
1210010214	A06C4B	C4 24V	GREEN
1210010217	A06C4E	C4 230V	GREEN
1210010219	A06C4H	C4 24V	YELLOW
1210010220	A06C4L	C4 115V	YELLOW
1210010221	A06C4M	C4 230V	YELLOW
1210010223	A06G22	G2 24V	RED
1210010226	A06G25	G2 230V	RED
1210010231	A06G2H	G2 24V	YELLOW
1210010233	A06G2L	G2 115V	YELLOW
1210010234	A06G2M	G2 230V	YELLOW
1210010236	A06S02	S0 24V	RED
1210010240	A06S0H	S0 24V	YELLOW
1210010437	A06A1E	A1 230V	GREEN
1210010500	A06S0K	S0 48V	YELLOW

PART No MATRIX

A	0	6	X	X	X

INTERNAL CIRCUIT

VOLTAGE AND LED COLOR

RED LED	GREEN LED	YELLOW LED
1= 12V	A= 12V	G= 12V
2= 24V	B= 24V	H= 24V
3= 48V	C= 48V	K= 48V
4= 115V	D= 115V	L= 115V
5= 230V	E= 230V	M= 230V

ITEM	QTY	DESCRIPTION	MATERIAL	FINISH/COLOR
5	1	DISTANZIALE LED	-	-
4	1	PCB WITH COMPONENT	-	SEE PART LIST
3	1	CORPO STAMPATO	-	BLACK
2	-	EPOXY ER2188K5K	-	BLACK
1	-	EPOXY ER2188B	-	BLACK

THIS DRAWING CONTAINS INFORMATION THAT IS PROPRIETARY TO MOLEX ELECTRONIC TECHNOLOGIES, LLC AND SHOULD NOT BE USED WITHOUT WRITTEN PERMISSION

DIMENSION UNITS	SCALE
mm	1:1

GENERAL TOLERANCES (UNLESS SPECIFIED)

ANGULAR TOL	± °
4 PLACES	±
3 PLACES	±
2 PLACES	±
1 PLACE	±
0 PLACES	±

DRAFT WHERE APPLICABLE MUST REMAIN WITHIN DIMENSIONS

CURRENT REV DESC: REMOVED OBSOLETED PART NUMBER AS PER PCN#511691.

EC NO: 737858

DRWN:	SANTHN	2023/02/10
CHK'D:	GGA	2023/02/24
APPR:	GGA	2023/02/24

INITIAL REVISION:

DRWN:	JMARSZALEK	2013/02/11
APPR:	MIWASIECZKO	2013/02/12

molex

LIGHTS ADAPTORS
SERIES A06XXX FOR DIN A

PRODUCT CUSTOMER DRAWING

DOCUMENT NUMBER	DOC TYPE	DOC PART	REVISION
SD-121001-006	PSD	001	A2

THIRD ANGLE PROJECTION	DRAWING	SERIES	MATERIAL NUMBER	CUSTOMER	SHEET NUMBER
	A4-SIZE	121001	SEE PART LIST	GENERAL MARKET	2 OF 2

DOCUMENT STATUS	P1	RELEASE DATE	2023/02/24 09:13:39

FORMAT: master-tb-prod-A4
REVISION: J1
DATE: 2021/05/01