CAPAROC E1 12-24DC/4A - Electronic circuit breaker

1157285

https://www.phoenixcontact.com/us/products/1157285

Please be informed that the data shown in this PDF document is generated from our online catalog. Please find the complete data in the user documentation. Our general terms of use for downloads are valid.

1-channel electronic circuit breaker module for protecting 12 and 24 V DC loads against overload and short circuit. With fixed nominal current. For DIN rail installation via the CAPAROC current rails.

Your advantages

- The benchmark that you can tailor with channel-precise design with integrated potential distribution
- Easy operation for everyone through tool-free assembly, uninterrupted installation, and transparent operating state
- Exceptionally easy design-in with the narrowest of space requirements and four protected outputs

Commercial data

Item number	1157285
Packing unit	1 pc
Minimum order quantity	1 pc
Sales key	CL11
Product key	CLA232
GTIN	4063151161804
Weight per piece (including packing)	77.46 g
Weight per piece (excluding packing)	94.8 g
Customs tariff number	85363010
Country of origin	DE

Technical data

Notes

General

Note	LABS release – in accordance with test specification VW PV 3. 10.7:2005-0

Product properties

Product type	Device circuit breakers
Product family	CAPAROC
Number of positions	1
No. of channels	1
Number of slots	1

Insulation characteristics

Protection class	III
Pollution degree	2

Electrical properties

General

Operating voltage	10 V DC ... 30 V DC
Rated voltage	12 V DC
	24 V DC
Rated current I_N	4 A DC
Rated current (pre-adjusted)	4 A
Rated surge voltage	0.5 kV
Tripping method	E (electronic)
Required backup fuse	Only required if I_{max} of the power supply > the short-circuit switching capacity. Integrated failsafe element.
Short-circuit switching capacity	300 A
Dielectric strength	35 V DC (Load circuit)
Fuse	electronic
Efficiency	> 99 %
Closed circuit current I_0	typ. 8.5 mA (no load at 24 V)
Power dissipation	typ. 0.2 W (no load at 24 V)
	< 0.57 W (in nominal operation at 24 V and 4 A)
Measuring tolerance I	± 15 % (typ.)
MTBF (IEC 61709, SN 29500)	21274544 h (at 25 °C with 21 % load)
	9809987 h (at 40°C with 34.25% load)
	1482752 h (at 40°C with 100% load)
Voltage drop	0.09 V (at 4 A)
Fail-safe element	5 A DC (per output channel)

Load circuit

Shutdown time	4 s (with overload 1.1…1.5 x I_N)
	1 s (with overload 1.5…2.0 x I_N)
	0.1 s (with overload 2.0…3.0 x I_N)
	typ. 10 ms (For short circuit > 3.0 x I_N)
Undervoltage switch-off	≤ 8.5 V DC (active)
	≥ 9.2 V DC (inactive)
Overvoltage switch-off	≥ 32.5 V DC (active)
	≤ 30.5 V DC (inactive)
Max. capacitive load	≤ 20000 µF (Depending on the current setting and the short-circuit current available)

Connection data

Fuse-protected output

Connection method	Push-in connection
Stripping length	10 mm
Conductor cross section flexible	0.2 mm² ... 4 mm²
Conductor cross section rigid	0.2 mm² ... 4 mm²
Conductor cross section AWG	24 ... 12
Conductor cross section, flexible, with ferrule, with plastic sleeve	0.25 mm² ... 4 mm²
Conductor cross section flexible, with ferrule without plastic sleeve	0.25 mm² ... 4 mm²

Signaling

Channel LED off	off (Channel switched off)
Channel LED yellow	lit (Channel switched on, channel load > 80%)
	flashing (Programming mode active)
	two flashes (Check the installation, no communication to power module)
Channel LED green	lit (Channel switched on)
Channel LED red	lit (Channel switched off, over- or undervoltage active)
	ON temporarily (Channel switched off, 5 s cool-down phase, overload or short-circuit release)
	flashing (Channel switched off, ready to be switched back on, overload or short-circuit release)

Dimensions

Dimensional drawing	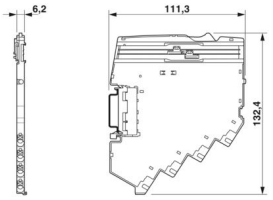
Width	6.2 mm
Height	132.4 mm
Depth	111.3 mm (incl. DIN rail 7.5 mm)

Material specifications

Color	light grey (RAL 7035)
Material	PA 6
	PA 6
	PA 6
	PC
Flammability rating according to UL 94	V-0

Environmental and real-life conditions

Ambient conditions

Degree of protection	IP20
Ambient temperature (operation)	-30 °C ... 65 °C (The temperature range of the power module must be taken into consideration)
Ambient temperature (storage/transport)	-40 °C ... 70 °C
Altitude	≤ 4000 m (amsl)
Humidity test	96 h, 95 % RH, 40 °C
Shock (operation)	30g (11 ms period, half-sine shock pulse, according to IEC 60068-2-27)
	25g (6 ms duration, half-sine shock pulse in accordance with IEC 60068-2-27, continuous shock)
	15g (6 ms duration, half-sine shock pulse in accordance with IEC 60068-2-27, continuous shock. If more than six CAPAROC E1 modules are used in the system.)
Vibration (operation)	5g (10 ... 150 Hz / 10 cycles / axis / X, Y, Z)

Approvals

UL approval

Identification	UL/C-UL Listed UL 508
	UL Recognized UL 2367
	UL 121201 Class I, Division 2, Groups A, B, C, D, T4A
	NEC Class 2 according to UL 1310

Corrosive gas test

Identification	ISA S71.04.2013 G3 Harsh Group A

Standards and regulations

Standards/specifications	EN 61000-6-2
Note	EMC – Immunity for industrial areas
Standards/specifications	EN 61000-6-3
Note	EMC – Emission for residential, business and commercial properties and small operations
Standards/specifications	EN 60068-2-78
Note	Environmental influences – Moisture and heat, constant
Standards/specifications	EN 50178
Note	Equipping power installations with electronic equipment

Standards/specifications	EN 60068-2-6
Note	Environmental influences – Vibrations (sinusoidal)
Standards/specifications	EN 60068-2-27
Note	Environmental influences – Shocks

Mounting

Mounting type	pluggable onto CAPAROC CR… current rail

Drawings

Application drawing

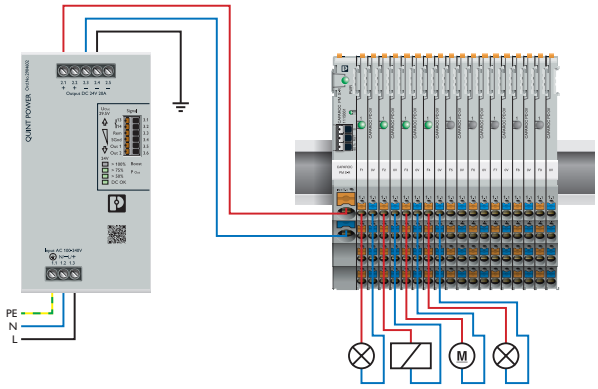

Diagram

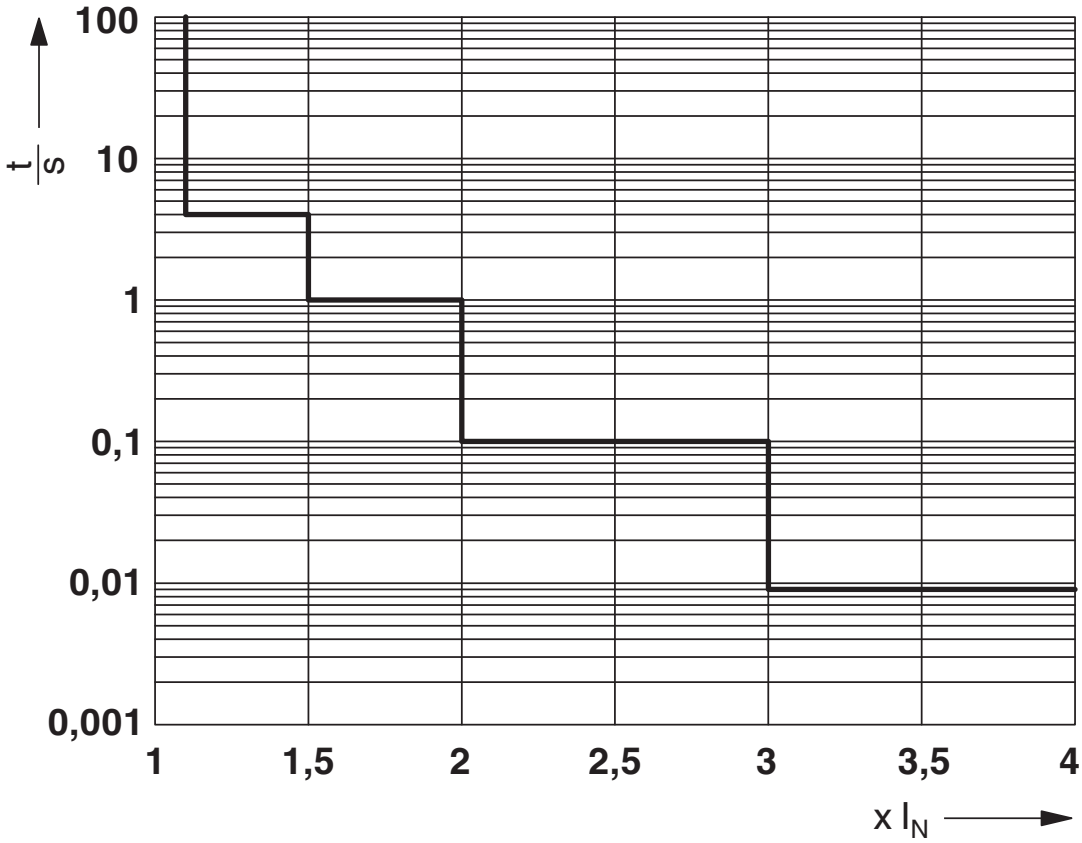

Trigger characteristic

Diagram

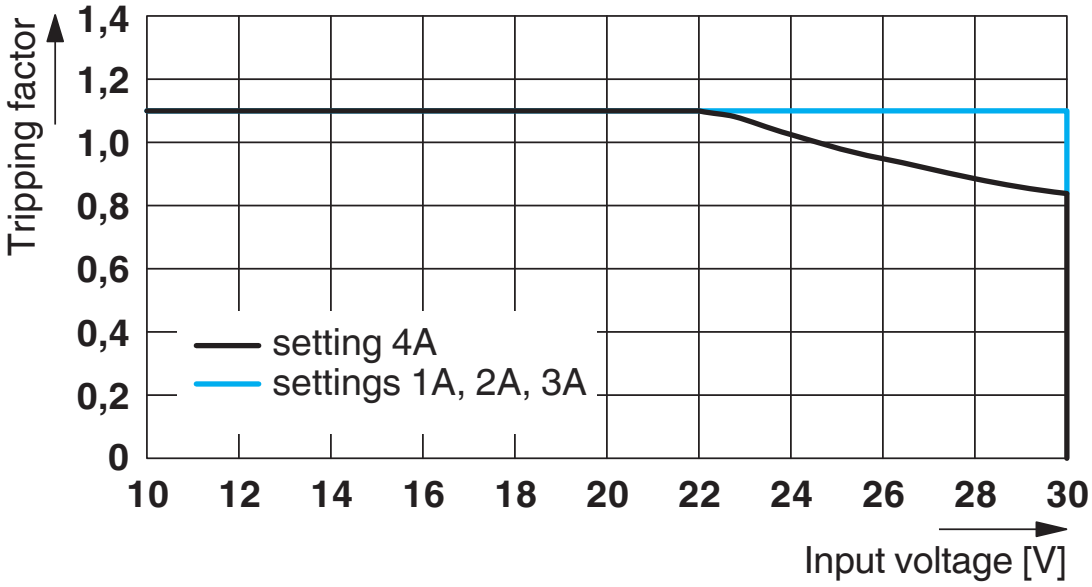

Tripping characteristic according to the input voltage

Dimensional drawing

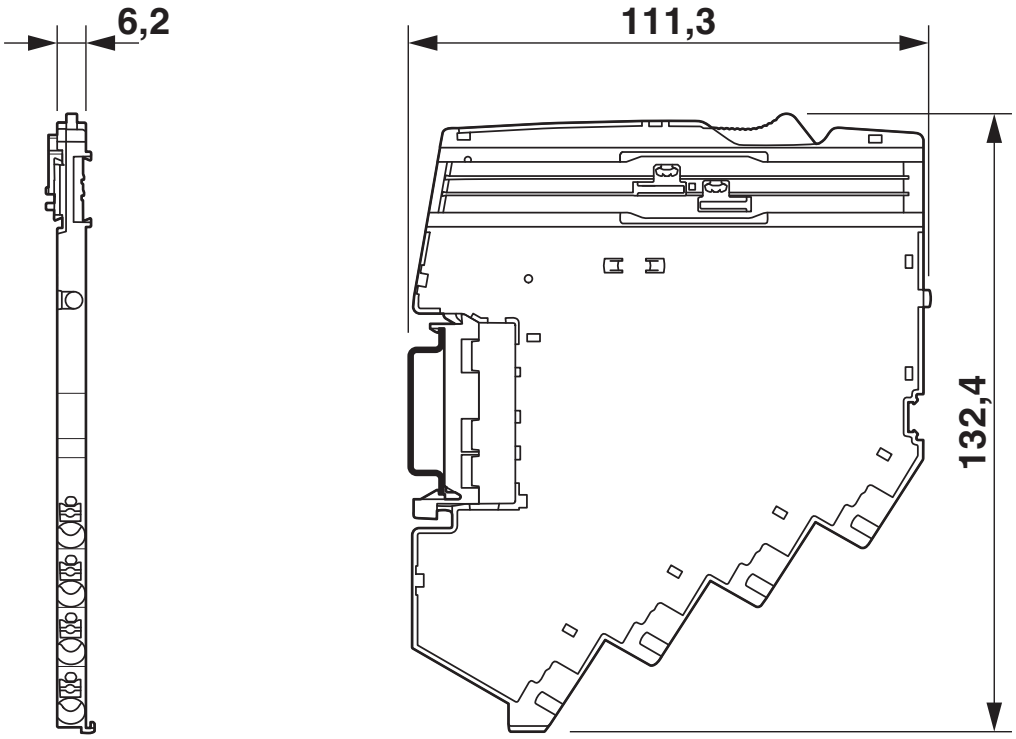

Product drawing

Block diagram

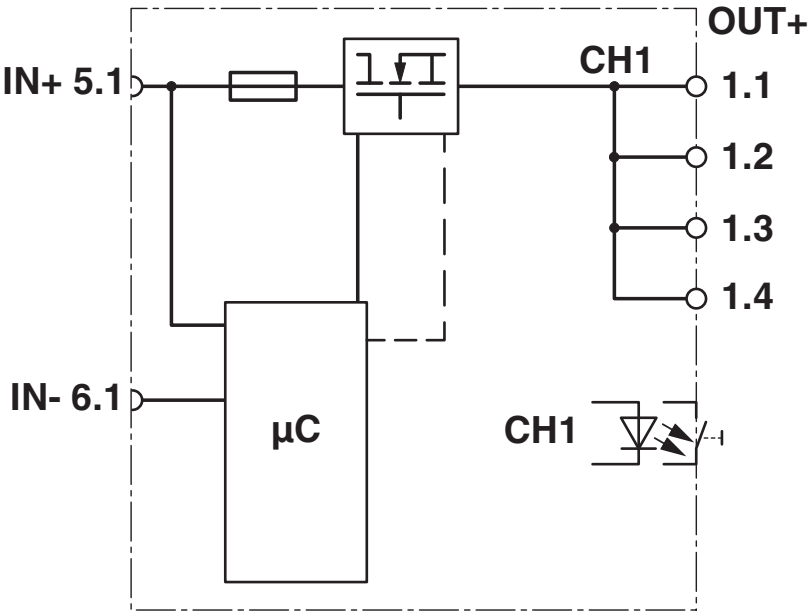

Approvals

To download certificates, visit the product detail page: https://www.phoenixcontact.com/us/products/1157285

UL Recognized
Approval ID: FILE E 317172

UL Listed
Approval ID: FILE E 123528

cUL Listed
Approval ID: FILE E 123528

UL Recognized
Approval ID: FILE E 324415

cUL Listed
Approval ID: FILE E 483407

UL Listed
Approval ID: FILE E 483407

cULus Listed

cULus Listed

Classifications

ECLASS

ECLASS-11.0	27140401
ECLASS-12.0	27140401
ECLASS-13.0	27140401

ETIM

ETIM 9.0	EC003538

UNSPSC

UNSPSC 21.0	39121400

Environmental product compliance

EU RoHS

Fulfills EU RoHS substance requirements	Yes
Exemption	7(a), 7(c)-I

China RoHS

Environment friendly use period (EFUP)	EFUP-50
	An article-related China RoHS declaration table can be found in the download area for the respective article under "Manufacturer declaration". For all articles with EFUP-E, no China RoHS declaration table issued and required.

EU REACH SVHC

REACH candidate substance (CAS No.)	Lead(CAS: 7439-92-1)
SCIP	337dc387-b238-4b4f-9035-9daf2082d1df

Mandatory accessories

CAPAROC CR 20 - Busbar

1110989

https://www.phoenixcontact.com/us/products/1110989

Busbar for CAPAROC system with 20 slots. For installation on a DIN rail.

CAPAROC CR 8 - Busbar

1115672

https://www.phoenixcontact.com/us/products/1115672

Busbar for the CAPAROC system with 8 slots. For installation on a DIN rail.

CAPAROC PM S-R - Power module

1115661

https://www.phoenixcontact.com/us/products/1115661

Power module with status output and reset input for supplying the CAPAROC circuit breaker system with 12 or 24 V DC. For DIN rail installation via the CAPAROC current rails.

CAPAROC PM PN - Power module

1110986

https://www.phoenixcontact.com/us/products/1110986

Power module with PROFINET interface for supplying the CAPAROC circuit breaker system with 12 or 24 V DC. Additional system interface for communication with the power supply. For DIN rail installation via the CAPAROC current rails.

CAPAROC PM IOL - Power module

1115670

https://www.phoenixcontact.com/us/products/1115670

Power module with IO-Link interface for supplying the CAPAROC circuit breaker system with 12 or 24 V DC for up to 20 channels. For DIN rail installation via the CAPAROC current rails.

CAPAROC PM EIP - Power module

1393553

https://www.phoenixcontact.com/us/products/1393553

Power module with EtherNet/IP™ interface for supplying the CAPAROC circuit breaker system with 12 V DC or 24 V DC. Additional system interface for communication with the power supply. For DIN rail installation via the CAPAROC current rails.

Accessories

CAPAROC PD 0V - Potential distributors

1110987

https://www.phoenixcontact.com/us/products/1110987

Potential distributor with Push-in connections for directly connecting the 0 V return conductor in the CAPAROC system. For DIN rail installation via the CAPAROC current rails.

UC-TMF 6 - Marker for terminal blocks

0818140

https://www.phoenixcontact.com/us/products/0818140

Marker for terminal blocks, Sheet, white, unlabeled, can be labeled with: BLUEMARK ID COLOR, BLUEMARK ID, BLUEMARK CLED, PLOTMARK, CMS-P1-PLOTTER, mounting type: snapped, for terminal block width: 6.2 mm, lettering field size: 5.6 x 5.1 mm, Number of individual labels: 80

UC-TM 6 - Marker for terminal blocks

0818085

https://www.phoenixcontact.com/us/products/0818085

Marker for terminal blocks, Sheet, white, unlabeled, can be labeled with: BLUEMARK ID COLOR, BLUEMARK ID, BLUEMARK CLED, PLOTMARK, CMS-P1-PLOTTER, mounting type: snapped, for terminal block width: 6.2 mm, lettering field size: 5.6 x 10.5 mm, Number of individual labels: 80

UCT-TM 6 - Marker for terminal blocks

0828736

https://www.phoenixcontact.com/us/products/0828736

Marker for terminal blocks, Sheet, white, unlabeled, can be labeled with: TOPMARK NEO, TOPMARK LASER, BLUEMARK ID COLOR, BLUEMARK ID, BLUEMARK CLED, THERMOMARK PRIME, THERMOMARK CARD 2.0, THERMOMARK CARD, mounting type: snapped, for terminal block width: 6.2 mm, lettering field size: 5.6 x 10.5 mm, Number of individual labels: 60

UCT-TMF 6 - Marker for terminal blocks

0828746

https://www.phoenixcontact.com/us/products/0828746

Marker for terminal blocks, Sheet, white, unlabeled, can be labeled with: TOPMARK NEO, TOPMARK LASER, BLUEMARK ID COLOR, BLUEMARK ID, BLUEMARK CLED, THERMOMARK PRIME, THERMOMARK CARD 2.0, THERMOMARK CARD, mounting type: snapped, for terminal block width: 6.2 mm, lettering field size: 5.4 x 4.7 mm, Number of individual labels: 60

CAPAROC CR EXT20 - Busbar

1115674

https://www.phoenixcontact.com/us/products/1115674

Extension busbar with 20 slots for the CAPAROC system. For installation on a DIN rail.

CAPAROC CR EXT8 - Busbar

1110990

https://www.phoenixcontact.com/us/products/1110990

Extension busbar with 8 slots for CAPAROC system. For installation on a DIN rail.

CAPAROC CR EXT4 - Busbar

1110991

https://www.phoenixcontact.com/us/products/1110991

Extension busbar with 4 slots for the CAPAROC system. For installation on a DIN rail.

CAPAROC CR CON - Metal part

1270955

https://www.phoenixcontact.com/us/products/1270955

Metal extension rails from connecting CAPAROC initial busbars.

Phoenix Contact 2024 © - all rights reserved
https://www.phoenixcontact.com

Phoenix Contact USA
586 Fulling Mill Road
Middletown, PA 17057, United States
(+717) 944-1300
info@phoenixcon.com