PASTERNACK
an INFINITE brand

WR-112 Waveguide 50 dB Crossguide Coupler, UG Choke Flange, UG Cover Flange Coupled, 6.57 GHz to 9.99 GHz, Aluminum



Waveguide Couplers Technical Data Sheet PEWCP1083-50

The PEWCP1083-50 is a 50 dB WR-112 three port crossguide coupler with intergrated UG Cover Flange for the coupled port. This coupler can be mounted directly into the waveguide signal path, connected via waveguide to allow signal sampling /monitoring. The coupler has a typical VSWR of 1.1:1 and are made of Aluminum with UG Choke flanges. The PEWCP1083-50 is part of a family of cross guide couplers offered by Pasternack with coupling values ranging from 20 to 50 dB.

Features

- Three Port Crossguide Waveguide Coupler
- 50±1.5 dB Nominal Coupling Level
- 6.57 GHz to 9.99 GHz Frequency Range
- Low VSWR < 1.25:1

Applications

- Test Benches
- Radar
- Satellite
- Microwave Radio
- Attenuation Measurements
- Power Measurements
- Source Leveling

Electrical Specifications

Description	Minimum	Typical	Maximum	Units
Frequency Range	6.57		9.99	GHz
Coupler				
Nominal Coupling Level		50		dB
Coupling Accuracy			±1.5	dB
Directivity	18			dB
Insertion Loss		0.1		dB
Main Line VSWR			1.1:1	
Secondary Line VSWR			1.25:1	
Input Power (CW)			800	Watts
Input Power, Peak			300	kWatts

Mechanical Specifications

Size

Length	4.724 in [119.99 mm]
Width	3.228 in [81.99 mm]
Height	1.882 in [47.8 mm]
Weight	0.661 lbs [299.82 g]

Interface

Waveguide Size	WR-112
Flange Type	UG Cover
Coupler Body Material and Plating	Aluminum, Chromate

Click the following link (or enter part number in “SEARCH” on website) to obtain additional part information including price, inventory and certifications: WR-112 Waveguide 50 dB Crossguide Coupler, UG Choke Flange, UG Cover Flange Coupled, 6.57 GHz to 9.99 GHz, Aluminum PEWCP1083-50

Pasternack Enterprises, Inc. • P.O. Box 16759, Irvine, CA 92623
Phone: (866) 727-8376 or (949) 261-1920 • **Fax:** (949) 261-7451
Sales@Pasternack.com • Techsupport@Pasternack.com

© 2020 Pasternack Enterprises All Rights Reserved

PASTERNACK
an INFINITE brand

WR-112 Waveguide 50 dB Crossguide Coupler, UG Choke Flange, UG Cover Flange Coupled, 6.57 GHz to 9.99 GHz, Aluminum



Waveguide Couplers Technical Data Sheet PEWCP1083-50

Environmental Specifications

Compliance Certifications (see product page for current document)

Plotted and Other Data

Notes:

WR-112 Waveguide 50 dB Crossguide Coupler, UG Choke Flange, UG Cover Flange Coupled, 6.57 GHz to 9.99 GHz, Aluminum from Pasternack Enterprises has same day shipment for domestic and International orders. Our RF, microwave and millimeter wave products maintain a 99.4% availability and are part of the broadest selection in the industry.

Click the following link (or enter part number in “SEARCH” on website) to obtain additional part information including price, inventory and certifications: WR-112 Waveguide 50 dB Crossguide Coupler, UG Choke Flange, UG Cover Flange Coupled, 6.57 GHz to 9.99 GHz, Aluminum PEWCP1083-50

URL: https://www.pasternack.com/50-db-wr-112-waveguide-crossguide-coupler-pewcp1083-50-p.aspx

The information contained in this document is accurate to the best of our knowledge and representative of the part described herein. It may be necessary to make modifications to the part and/or the documentation of the part, in order to implement improvements. Pasternack reserves the right to make such changes as required. Unless otherwise stated, all specifications are nominal. Pasternack does not make any representation or warranty regarding the suitability of the part described herein for any particular purpose, and Pasternack does not assume any liability arising out of the use of any part or documentation.

Pasternack Enterprises, Inc. • P.O. Box 16759, Irvine, CA 92623
Phone: (866) 727-8376 or (949) 261-1920 • **Fax:** (949) 261-7451
Sales@Pasternack.com • Techsupport@Pasternack.com

© 2020 Pasternack Enterprises All Rights Reserved

© 2020 Pasternack Enterprises All Rights Reserved

PEWCP1083-50 CAD Drawing

WR-112 Waveguide 50 dB Crossguide Coupler, UG Choke Flange, UG Cover Flange Coupled, 6.57 GHz to 9.99 GHz, Aluminum

REVISIONS			
REV.	DESCRIPTION	DATE	APPROVED
A	INITIAL RELEASE	7/7/2022	S. PONG

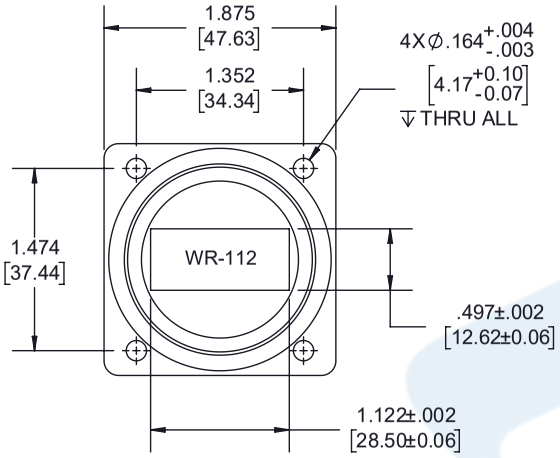

FLANGE DETAIL
(FBE84/UG CHOKE)

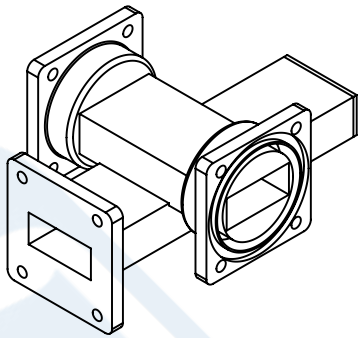

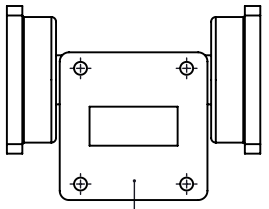

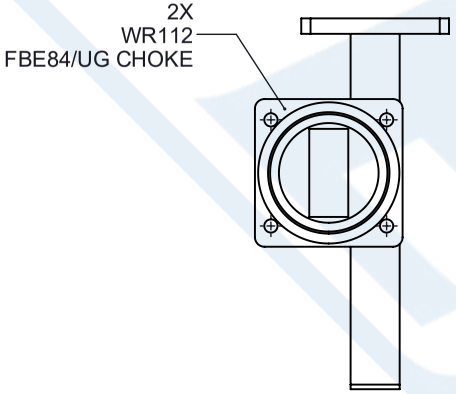

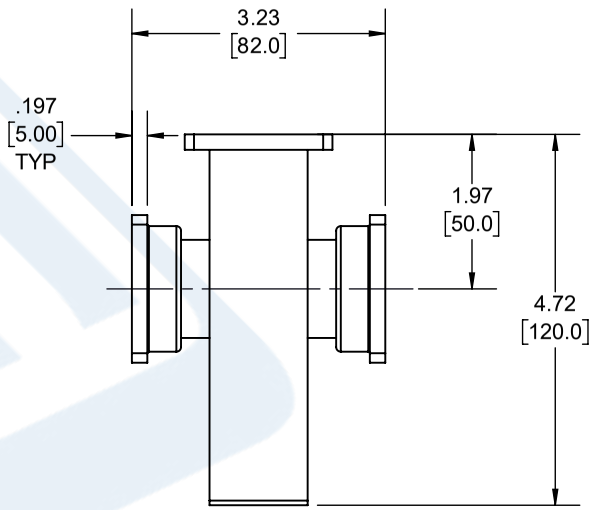

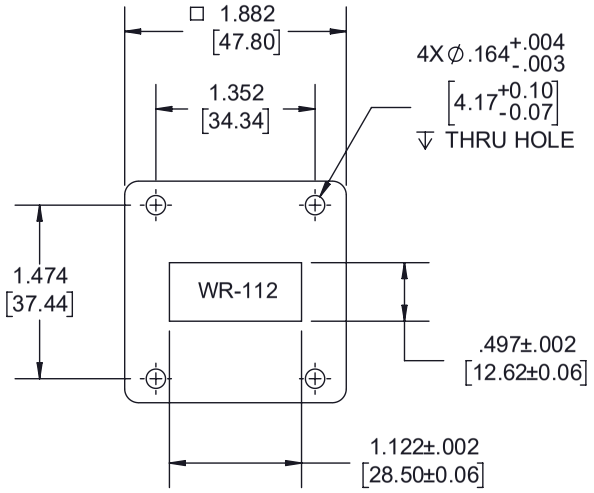

FLANGE DETAIL
(FBP84/UG COVER)

THESE COMMODITIES, TECHNOLOGY OR SOFTWARE WERE EXPORTED FROM THE UNITED STATES IN ACCORDANCE WITH THE EXPORT ADMINISTRATION REGULATIONS. DIVERSION CONTRARY TO U.S. LAW PROHIBITED.

UNLESS OTHERWISE SPECIFIED
LEADING DIMENSIONS ARE INCHES
DIMENSIONS IN [ ] ARE MILLIMETERS

TOLERANCES:

.X = ± .2 [5.08] | FRACTIONS ± 1/32
.XX = ± .02 [.51] | ANGLES ± 1°
.XXX = ± .005 [.13]

CABLE LENGTH (L) TOLERANCES:

L ≤ 12 [305] = +1 [25] / -0
12 [305] < L ≤ 60 [1524] = +2 [51] / -0
60 [1524] < L ≤ 120 [3048] = +4 [102] / -0
120 [3048] < L ≤ 300 [7620] = +6 [152] / -0
300 [7620] < L = +5%L / -0

ALL DIMENSIONS SHOWN ARE FOR REFERENCE ONLY.

PASTERNACK® an INFINITE brand
Pasternack Enterprises, Inc.
P.O.Box 16759, Irvine, CA 92623.
Phone: 1.949.261.1920 | 1.866.727.8376
Fax: 1.949.261.7451
Website: www.pasternack.com
E-mail: sales@pasternack.com

THIRD-ANGLE PROJECTION

THE INFORMATION AND DESIGN IN THIS DOCUMENT IS THE PROPERTY OF PASTERNACK CORPORATION ALL RIGHTS RESERVED.

SHEET 1 OF 1

SCALE N/A

SIZE	CAGE CODE	DRAWN BY	ITEM NO.	REV
A	53919	K.DANG	PEWCP1083-50	A