PASTERNACK®
THE ENGINEER'S RF SOURCE



WR-6 Instrumentation Grade Waveguide E-Bend with UG-387/U-M Flange Operating from 110 GHz to 170 GHz

TECHNICAL DATA SHEET PEW6B0000

Pasternack's PEW6B0000 is an E-Plane, 90 degree, WR-6 waveguide bend that operates from 110 GHz to 170 GHz. This waveguide bend offers a typical 0.35 dB insertion loss and a typical 1.15 VSWR. The input of this straight waveguide section has a UG-387/U-M Flange. PEW6B0000 is part of over 40,000 RF, microwave and millimeter wave components. WR-6 waveguide bend will ship worldwide the same day it is purchased along with our other RF components.

- 90° Bend
- E-Plane
- WR-6 Waveguide
- UG-387/U-M Flange
- 110 GHz to 170 GHz Frequency Range
- Comprehensive waveguide offering also includes Straight Sections, H-Bends, Waveguide to Coax Adapters, Filters, Terminations, and more.

Electrical Specifications

Description	Minimum	Typical	Maximum	Units
Frequency Range	110		170	GHz
VSWR		1.15:1		
Insertion Loss		0.35		dB

Mechanical Specifications

Waveguide Size: WR-6
Waveguide Design: Instrumentation Grade

Description	Flange 1	Waveguide	Flange 2
Flange Type	Round Cover		Round Cover
Flange Designation	UG-387/U-M	WR-6	UG-387/U-M
Material	Oxygen Free Hard Copper	Oxygen Free Hard Copper	Oxygen Free Hard Copper
Plating	Gold	Gold	Gold

Size
Weight: 0.044 lbs [19.96 g]

Compliance Certifications (see product page for current document)

Plotted and Other Data

Notes:

Click the following link (or enter part number in "SEARCH" on website) to obtain additional part information including price, inventory and certifications: WR-6 Waveguide E-Bend with UG-387/U-M Flange Operating from 110 GHz to 170 GHz PEW6B0000

Pasternack Enterprises, Inc. • P.O. Box 16759, Irvine, CA 92623
Phone: (866) 727-8376 or (949) 261-1920 • **Fax:** (949) 261-7451
Sales@Pasternack.com • Techsupport@Pasternack.com

© 2020 Pasternack Enterprises All Rights Reserved

PASTERNACK®
THE ENGINEER'S RF SOURCE



WR-6 Instrumentation Grade Waveguide E-Bend with UG-387/U-M Flange Operating from 110 GHz to 170 GHz

TECHNICAL DATA SHEET PEW6B0000

WR-6 Instrumentation Grade Waveguide E-Bend with UG-387/U-M Flange Operating from 110 GHz to 170 GHz from Pasternack Enterprises has same day shipment for domestic and International orders. Our RF, microwave and millimeter wave products maintain a 99.4% availability and are part of the broadest selection in the industry.

Click the following link (or enter part number in "SEARCH" on website) to obtain additional part information including price, inventory and certifications: WR-6 Waveguide E-Bend with UG-387/U-M Flange Operating from 110 GHz to 170 GHz PEW6B0000

URL: https://www.pasternack.com/wr-6-waveguide-e-bend-ug-383-mod-flange-110-170-ghz-pew6b0000-p.aspx

The information contained in this document is accurate to the best of our knowledge and representative of the part described herein. It may be necessary to make modifications to the part and/or the documentation of the part, in order to implement improvements. Pasternack reserves the right to make such changes as required. Unless otherwise stated, all specifications are nominal. Pasternack does not make any representation or warranty regarding the suitability of the part described herein for any particular purpose, and Pasternack does not assume any liability arising out of the use of any part or documentation.

Pasternack Enterprises, Inc. • P.O. Box 16759, Irvine, CA 92623
Phone: (866) 727-8376 or (949) 261-1920 • **Fax:** (949) 261-7451
Sales@Pasternack.com • Techsupport@Pasternack.com

© 2020 Pasternack Enterprises All Rights Reserved

PEW6B0000 CAD Drawing

WR-6 Instrumentation Grade Waveguide E-Bend with UG-387/U-M Flange Operating from 110 GHz to 170 GHz

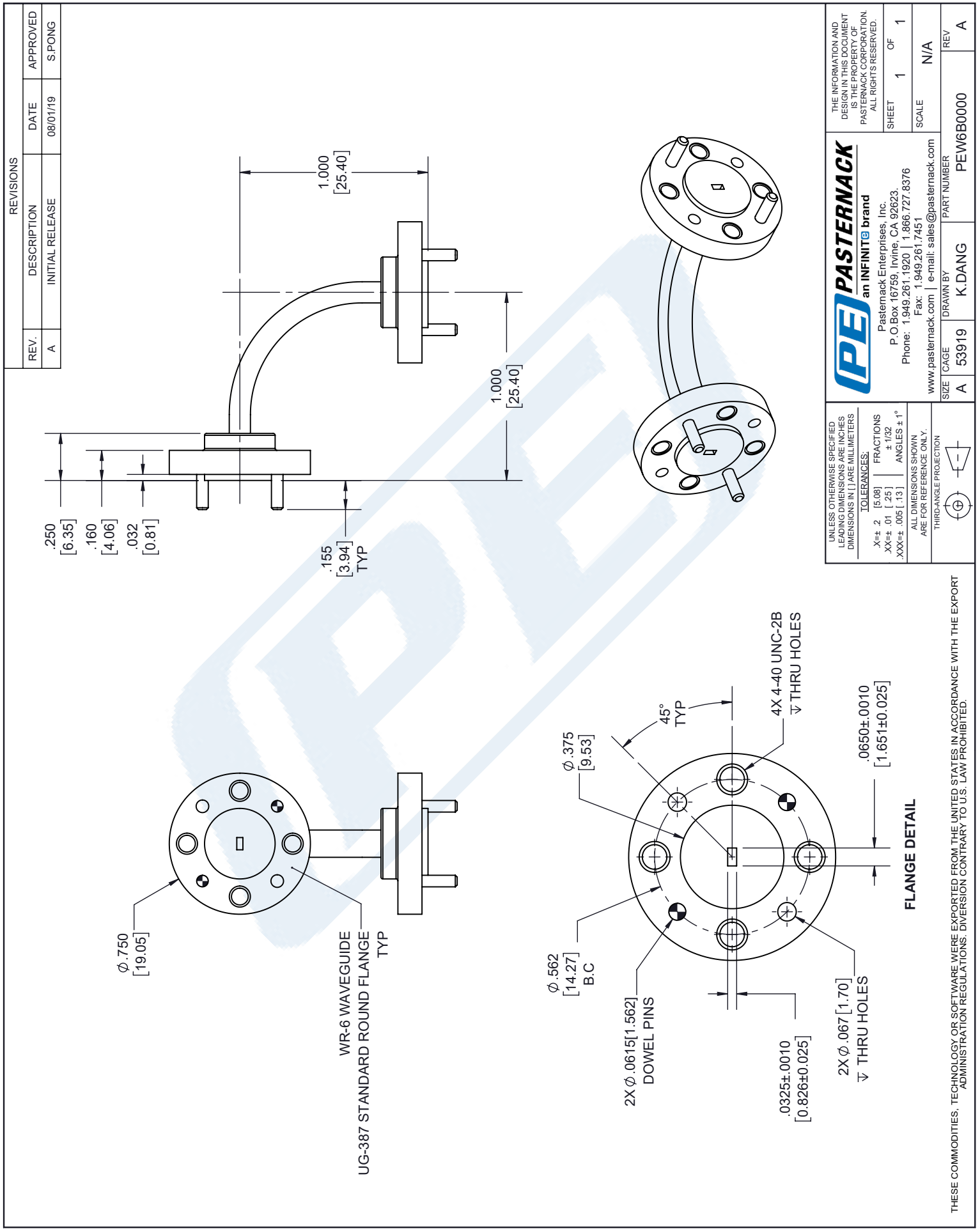

© 2020 Pasternack Enterprises All Rights Reserved