1 dB Fixed Attenuator, SMA Male to SMA Female Black Anodized Aluminum Heatsink Body Rated to 10 Watts Up to 6 GHz



PE7428-01

Features

- Bidirectional
- DC to 6 GHz Frequency Range
- Attenuation 1dB Typical
- Max Power 10 Watts (CW)
- VSWR < 1.2:1

Applications

- Instrumentation
- Precision measurements
- Prototyping and characterization
- Production systems

Description

Pasternack carries a wide range of fixed attenuators with a broad selection of attenuation levels, frequency ranges, and power dissipation ranges. RF microwave attenuators (also known as RF pads) lower the amplitude of a signal (attenuate) a known amount and can be used in a wide variety of applications. These attenuator pads are used when a signal needs to be reduced to protect measurement equipment or other circuitry, to extend the range of power meters and amplifiers, and to impedance match circuits by reducing the VSWR seen by adjacent components. RF attenuators can prevent signal overload in amplifiers, receivers and detectors, adjusting the signal level to a range that is optimal.

Few RF components are as commonly used as fixed coaxial attenuators, and Pasternack carries one of the largest in-stock varieties and ships them same day. The 1 dB Fixed Attenuator PE7428-01 is rated to 10 Watts and operates from DC to 6 GHz. The versatile coaxial package uses SMA male to SMA female connectors and is also REACH and RoHS compliant. The Black Anodized Aluminum Heatsink body allows for efficient heat dissipation under high power usage conditions.

Electrical Specifications

Description	Minimum	Typical	Maximum	Units
Frequency Range	DC		6	GHz
Impedance		50		Ohms
Nominal Attenuation		1		dB
Attenuation Accuracy		0.5		dB
VSWR			1.2:1	
Input Power, CW			10	Watts

Specifications by Frequency

Description	F1	F2	F3	F4	F5	Units
Frequency Range	DC to 3	3 to 6				GHz
VSWR, Max	1.15:1	1.2:1				

Electrical Specification Notes:
Values at +25°C, sea level.

Mechanical Specifications

Size

Length	1.86 in [47.24 mm]
Width/Diameter	0.62 in [15.75 mm]
Weight	0.0525 lbs [23.81 g]

© 2023 Infinite Electronics, Inc. Pasternack is a registered trademark of Infinite Electronics, Inc.
+1 (866) 558-2786 | sales@pasternack.com | pasternack.com

1 dB Fixed Attenuator, SMA Male to SMA Female Black Anodized Aluminum Heatsink Body Rated to 10 Watts Up to 6 GHz



PE7428-01

Body Material and Plating	Black Anodized Aluminum Heatsink

Configuration

Design	Fixed
Package Style	Connectorized Module

Connectors

Description	Connector 1	Connector 2
Type	SMA Male	SMA Female
Contact Material and Plating	Beryllium Copper, Gold	Beryllium Copper, Gold
Contact Plating Specification	MIL-G-45204	MIL-G-45204
Torque	7 in-lbs 0.79 Nm	
Body Material and Plating	Passivated Stainless Steel	Passivated Stainless Steel

Environmental Specifications

Temperature

Operating Range	-55 to +125 deg C

Compliance Certifications (see product page for current document)

Plotted and Other Data

Notes:

Typical Performance Data

1 dB Fixed Attenuator, SMA Male to SMA Female Black Anodized Aluminum Heatsink Body Rated to 10 Watts Up to 6 GHz from Pasternack Enterprises has same day shipment for domestic and International orders. Our RF, microwave and millimeter wave products maintain a 99.4% availability and are part of the broadest selection in the industry.

Click the following link (or enter part number in "SEARCH" on website) to obtain additional part information including price, inventory and certifications: 1 dB Fixed Attenuator, SMA Male to SMA Female Black Anodized Aluminum Heatsink Body Rated to 10 Watts Up to 6 GHz PE7428-01

URL: https://www.pasternack.com/1db-fixed-sma-male-sma-female-10-watts-attenuator-pe7428-01-p.aspx

The information contained within this document is accurate to the best of our knowledge and representative of the part described herein. It may be necessary to make modifications to the part and/or the documentation of the part in order to impliment improvements. Pasternack Enterprises reserves the right to make such changes as required. Unless otherwise stated, all specifications are nominal. Pasternack Enterprises does not make any representation or warranty regarding the suitability of the part described herein for any particular purpose, and Pasternack Enterprises does not assume liability arising out of the use of any part or document.

© 2023 Infinite Electronics, Inc. Pasternack is a registered trademark of Infinite Electronics, Inc.

PE7428-01 CAD Drawing

1 dB Fixed Attenuator, SMA Male to SMA Female Black Anodized Aluminum Heatsink Body Rated to 10 Watts Up to 6 GHz

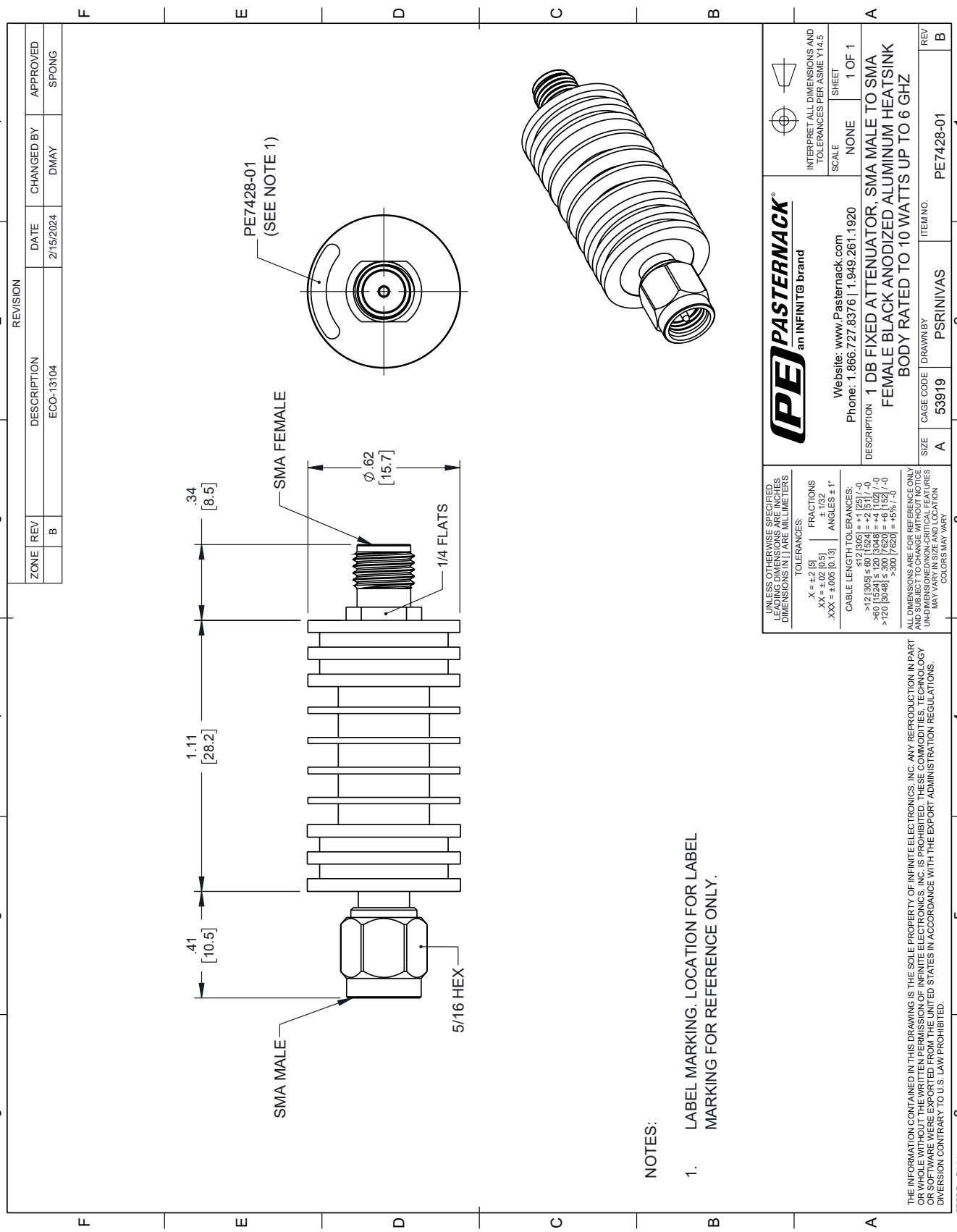

© 2023 Infinite Electronics, Inc. Pasternack is a registered trademark of Infinite Electronics, Inc.