PASTERNACK
an INFINITE brand



12 dBi MultiBand Sector Antenna N Type Connector

Antennas Technical Data Sheet PE51SE1005

Features

- Frequency coverage for 700 MHz, 850 MHz, AWS and PCS bands
- Dual cross polarized (X-Pol) in one antenna
- All weather operation
- Heavy duty steel mounting bracket with easy elevation and tilt adjustment
- Dual polarity feed system - (2) N-Female connectors

Applications

- DAS (Distributed Antenna Systems)
- Cellular networks
- Public safety
- IEEE 802.11b/g WiFi applications
- LPWAN, LoRA, LTE-M, NB-IoT, IoT, M2M applications

Description

The HyperLink PE51SE1005 is a professional grade 120 degree sector panel antenna specifically designed for DAS (Distributed Antenna Systems). It is ideal for LPWAN/IoT/M2M applications including LoRA, LTE-M, and nB-IoT.This outdoor all weather antenna helps wireless carriers to quickly increase capacity as well as deploy new spectrum in zoning challenged locations. The PE51SE1005 combines several different frequency bands to allow multi-user options.

This antenna's construction features a durable UV resistant PVC radome for durability and aesthetics. Its mounting system features heavy-duty up/down tilt mounting brackets. This allows installation at various degrees of incline for easy alignment. The PE51SE1005 features a single N-Female connector due to the antenna's internal combiner. This simplifies installation since only one coax cable is required to be sent to the antenna.

Configuration

Design	Sector
Band Type	Multi
Radiation Pattern	Directional
Polarization	Vertical
Cable Type	Coax Cable
Connector Type	N Female
Number of Ports	1
Lightning Protection	DC Ground

Electrical Specifications

Description	Minimum	Typical	Maximum	Units
Input VSWR		1.8:1		
Impedance		50		Ohms
Gain		12		dBi
Gain	12		12	dBi
Front to Back Ratio		15		dB
Input Power			100	Watts

Click the following link (or enter part number in "SEARCH" on website) to obtain additional part information including price, inventory and certifications: 12 dBi MultiBand Sector Antenna N Type Connector PE51SE1005

Pasternack Enterprises, Inc. • P.O. Box 16759, Irvine, CA 92623
Phone: (866) 727-8376 or (949) 261-1920 • **Fax:** (949) 261-7451
Sales@Pasternack.com • Techsupport@Pasternack.com

© 2019 Pasternack Enterprises All Rights Reserved

PASTERNACK
an INFINITE brand



12 dBi MultiBand Sector Antenna N Type Connector

Antennas Technical Data Sheet PE51SE1005

Specifications by Band

Description	Band 1	Band 2	Band 3	Band 4	Band 5	Units
Range	698-960	1,710-2,700				MHz
Gain	12	12				dBi
Horizontal Beam Width	120	120				Degees
Vertical Beam Width	18	18				Degees
Maximum Input Power	100					Watts

Mechanical Specifications

Radome Material	PVC

Size

Overall Length	61.7 in [156.72 cm]
Width	12.6 in [320.04 mm]
Height	6.3 in [160.02 mm]
Weight	32.5 lbs [14.74 kg]

Environmental Specifications

Temperature

Operating Range	-40 to +60 deg C

Compliance Certifications (see product page for current document)

Plotted and Other Data

Notes:

Click the following link (or enter part number in “SEARCH” on website) to obtain additional part information including price, inventory and certifications: 12 dBi MultiBand Sector Antenna N Type Connector PE51SE1005

Pasternack Enterprises, Inc. • P.O. Box 16759, Irvine, CA 92623
Phone: (866) 727-8376 or (949) 261-1920 • **Fax:** (949) 261-7451
Sales@Pasternack.com • Techsupport@Pasternack.com

© 2019 Pasternack Enterprises All Rights Reserved



12 dBi MultiBand Sector Antenna N Type Connector

Antennas Technical Data Sheet PE51SE1005

Typical Radiation Pattern

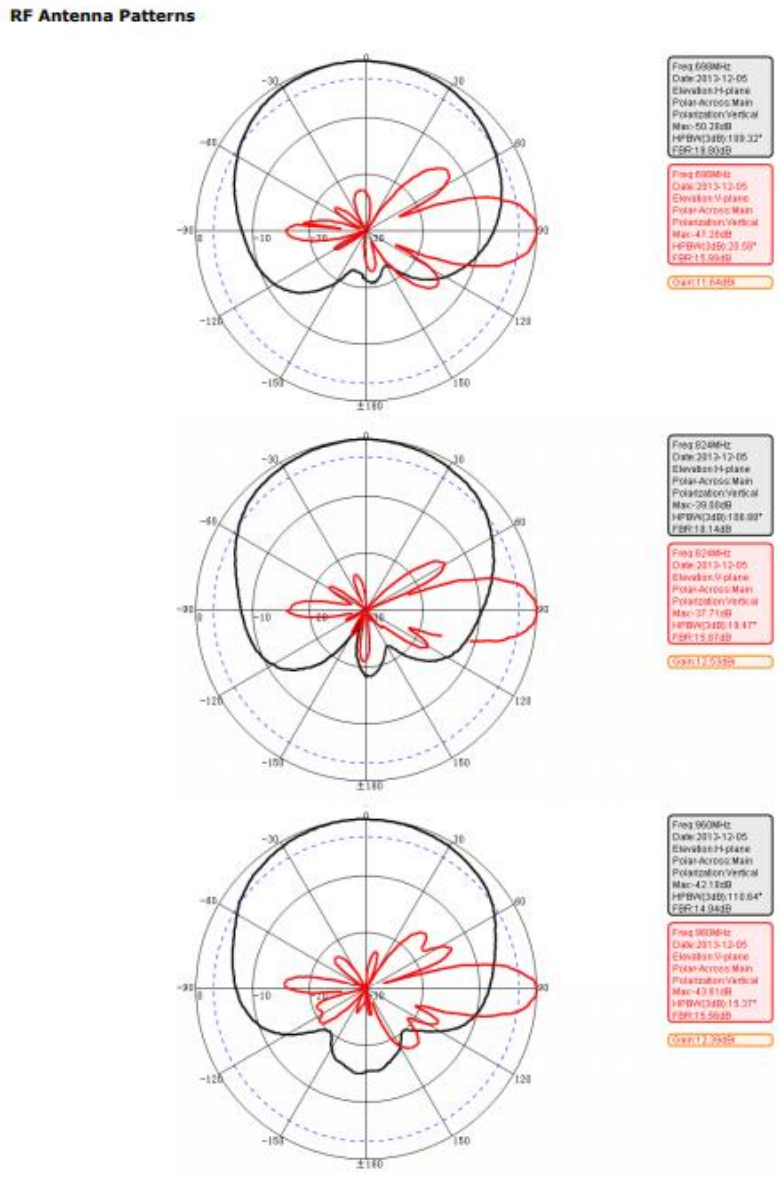

Click the following link (or enter part number in “SEARCH” on website) to obtain additional part information including price, inventory and certifications: 12 dBi MultiBand Sector Antenna N Type Connector PE51SE1005

Pasternack Enterprises, Inc. • P.O. Box 16759, Irvine, CA 92623
Phone: (866) 727-8376 or (949) 261-1920 • **Fax:** (949) 261-7451
Sales@Pasternack.com • Techsupport@Pasternack.com

© 2019 Pasternack Enterprises All Rights Reserved

PASTERNACK
an INFINITE brand



12 dBi MultiBand Sector Antenna N Type Connector

Antennas Technical Data Sheet PE51SE1005

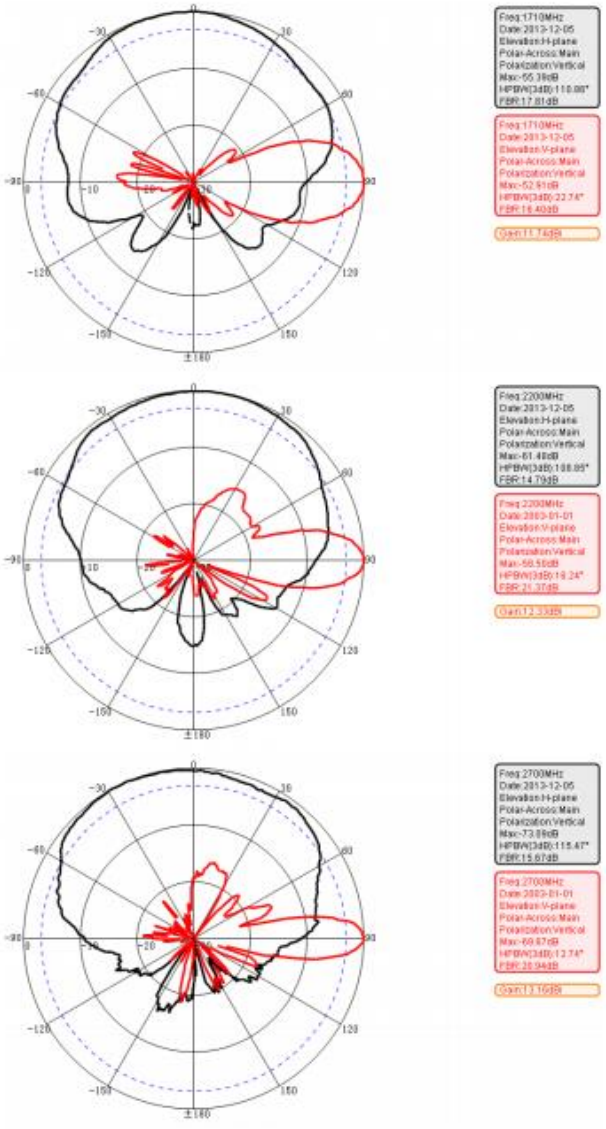

Click the following link (or enter part number in “SEARCH” on website) to obtain additional part information including price, inventory and certifications: 12 dBi MultiBand Sector Antenna N Type Connector PE51SE1005

Pasternack Enterprises, Inc. • P.O. Box 16759, Irvine, CA 92623
Phone: (866) 727-8376 or (949) 261-1920 • **Fax:** (949) 261-7451
Sales@Pasternack.com • Techsupport@Pasternack.com

© 2019 Pasternack Enterprises All Rights Reserved

PASTERNACK
an INFINITE brand



12 dBi MultiBand Sector Antenna N Type Connector

Antennas Technical Data Sheet PE51SE1005

12 dBi MultiBand Sector Antenna N Type Connector from Pasternack Enterprises has same day shipment for domestic and International orders. Our RF, microwave and millimeter wave products maintain a 99.4% availability and are part of the broadest selection in the industry.

Click the following link (or enter part number in “SEARCH” on website) to obtain additional part information including price, inventory and certifications: 12 dBi MultiBand Sector Antenna N Type Connector PE51SE1005

URL: https://www.pasternack.com/multi-antenna-12-dbi-gain-n-pe51se1005-p.aspx

The information contained in this document is accurate to the best of our knowledge and representative of the part described herein. It may be necessary to make modifications to the part and/or the documentation of the part, in order to implement improvements. Pasternack reserves the right to make such changes as required. Unless otherwise stated, all specifications are nominal. Pasternack does not make any representation or warranty regarding the suitability of the part described herein for any particular purpose, and Pasternack does not assume any liability arising out of the use of any part or documentation.

Pasternack Enterprises, Inc. • P.O. Box 16759, Irvine, CA 92623
Phone: (866) 727-8376 or (949) 261-1920 • **Fax:** (949) 261-7451
Sales@Pasternack.com • Techsupport@Pasternack.com

© 2019 Pasternack Enterprises All Rights Reserved

© 2019 Pasternack Enterprises All Rights Reserved

PE51SE1005 CAD Drawing

12 dBi MultiBand Sector Antenna N Type Connector

REVISIONS			
REV.	DESCRIPTION	DATE	APPROVED
A	INITIAL RELEASE	2/19/2020	M.MILLER

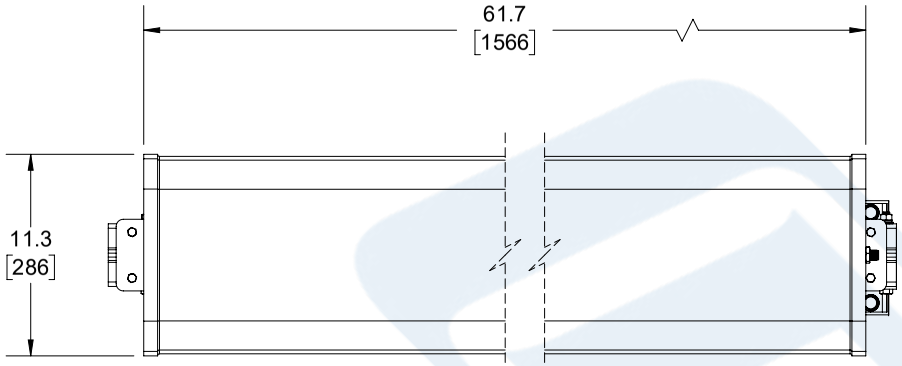

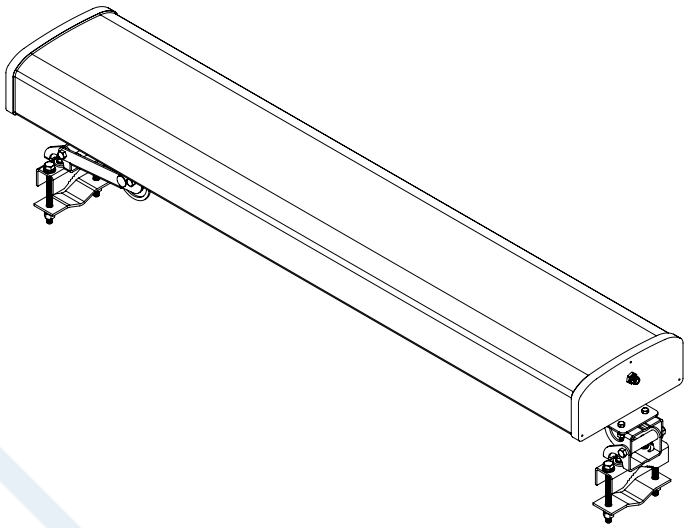

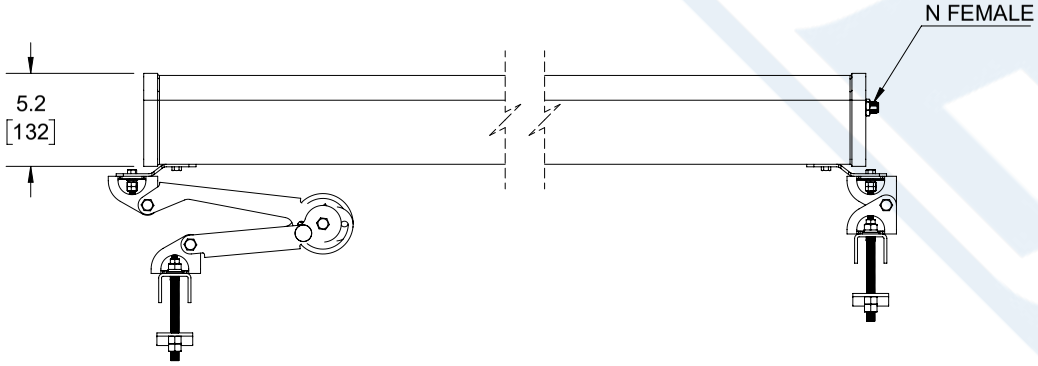

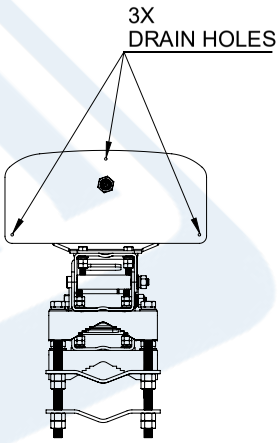

REGULATORY COMPLIANCE:

EU RoHS DIRECTIVE (MOST RECENT RELEASED VERSION)

THESE COMMODITIES, TECHNOLOGY OR SOFTWARE WERE EXPORTED FROM THE UNITED STATES IN ACCORDANCE WITH THE EXPORT ADMINISTRATION REGULATIONS. DIVERSION CONTRARY TO U.S. LAW PROHIBITED.

UNLESS OTHERWISE SPECIFIED
LEADING DIMENSIONS ARE INCHES
DIMENSIONS IN [ ] ARE MILLIMETERS

TOLERANCES:

.X = ± .2 [5.08]	FRACTIONS
.XX = ± .02 [.51]	± 1/32
.XXX = ± .005 [.13]	ANGLES ± 1°

CABLE LENGTH (L) TOLERANCES:

L ≤ 12 [305] = +1 [25] / -0
12 [305] < L ≤ 60 [1524] = +2 [51] / -0
60 [1524] < L ≤ 120 [3048] = +4 [102] / -0
120 [3048] < L ≤ 300 [7620] = +6 [152] / -0
300 [7620] < L = +5%L / -0

ALL DIMENSIONS SHOWN ARE FOR REFERENCE ONLY.

PASTERNACK® an INFINITE brand

Pasternack Enterprises, Inc.
P.O.Box 16759, Irvine, CA 92623.
Phone: 1.949.261.1920 | 1.866.727.8376
Fax: 1.949.261.7451
Website: www.pasternack.com
E-mail: sales@pasternack.com

THIRD-ANGLE PROJECTION

THE INFORMATION AND DESIGN IN THIS DOCUMENT IS THE PROPERTY OF PASTERNACK CORPORATION ALL RIGHTS RESERVED.

SHEET 1 OF 1

SCALE N/A

SIZE	CAGE CODE	DRAWN BY	ITEM NO.	REV
A	53919	K.DANG	PE51SE1005	A