PASTERNACK
an INFINITE brand



15 dBi WR-51 Standard Gain Horn Radome Cover

Waveguide Antenna Accessories Technical Data Sheet PEWGCOV051-15

Features

- 15 dBi WR-51 Waveguide Standard Gain Horn
- Polymethacrylimide
- Low Relative Permittivity (Dielectric Constant)
- Minimal reflection or attenuation of signal

Description

PEWGCOV051-15 is a radome cover for 15 dBi WR-51 Standard Gain Horn antenna. This waveguide antenna radome cover is made from high strength, thermally stable Polymethacrylimide (PMI). PMI offers a low Relative Permittivity (Dielectric Constant) at the high frequency ranges seen with microwave and millimeter wave components. This allows for minimal signal loss or attenuation over other materials.

Increase your system capabilities with our PMI radome covers, designed to enhance the durability and longevity of standard gain horn antennas. Shielding against environmental elements, our radome covers ensure consistent signal integrity in any conditions. PEWGCOV051-15 has internal dimensions of 1.5 in by 1.1 in and will fit 15 dBi WR-51 standard gain horns. Pasternack offers a wide selection of high performance waveguide components available in stock and same-day shipping to customers worldwide.

Mechanical Specifications

Body Material	Polymethacrylimide (PMI)
Length	1.64 in [41.66 mm]
Width	1.251 in [31.78 mm]
Height	0.177 in [4.5 mm]
Weight	0.01 lbs [4.54 g]

Click the following link (or enter part number in “SEARCH” on website) to obtain additional part information including price, inventory and certifications: 15 dBi WR-51 Standard Gain Horn Radome Cover PEWGCOV051-15

Pasternack Enterprises, Inc. • P.O. Box 16759, Irvine, CA 92623
Phone: (866) 727-8376 or (949) 261-1920 • **Fax:** (949) 261-7451
Sales@Pasternack.com • Techsupport@Pasternack.com

© 2020 Pasternack Enterprises All Rights Reserved



15 dBi WR-51 Standard Gain Horn Radome Cover

Waveguide Antenna Accessories Technical Data Sheet PEWGCOV051-15

Mechanical Performance								
Typical Density (kg/m^2)	Compressive Strength MPa	Compression Modulus (MPa)	Tensile Strength (MPa)	Tensile Modulus (MPa)	Fracture Growth Rate(%)	Bending Strength (MPa)	Bending Modulus (MPa)	Deflection (MPa)
200	8.5	317	7.5	410	2.4	13	449	22
Standard Test	GB/T 8813-2008		GB/T9641-1988			GB/T 8812.2-2007		

Electrical Performance								
	Frequency							
Antenna Radome Material	2	2.5	2.8	5	10	26	26.5	Tolerance
ε_r (Relative Permittivity)	1.08	1.09	/	1.14	1.14	1.14	1.12	±0.01

Remarks:

1. Test method: GB/T - 5597 - 1999 "Test Method for Microwave Complex Permittivity of Solid Dielectric".
2. Sample size: diameter 51mm, thickness 5mm.
3. Sampling rate and data processing: 5 samples were tested for each material, each sample was tested on both sides, and a total of 80 samples were obtained for each material.

data points, and take the average to obtain the final data.

Click the following link (or enter part number in “SEARCH” on website) to obtain additional part information including price, inventory and certifications: 15 dBi WR-51 Standard Gain Horn Radome Cover PEWGCOV051-15

Pasternack Enterprises, Inc. • P.O. Box 16759, Irvine, CA 92623
Phone: (866) 727-8376 or (949) 261-1920 • **Fax:** (949) 261-7451
Sales@Pasternack.com • Techsupport@Pasternack.com

© 2020 Pasternack Enterprises All Rights Reserved



15 dBi WR-51 Standard Gain Horn Radome Cover

Waveguide Antenna Accessories Technical Data Sheet PEWGCOV051-15

Compliance Certifications (see product page for current document)

15 dBi WR-51 Standard Gain Horn Radome Cover from Pasternack Enterprises has same day shipment for domestic and International orders. Our RF, microwave and millimeter wave products maintain a 99.4% availability and are part of the broadest selection in the industry.

Click the following link (or enter part number in “SEARCH” on website) to obtain additional part information including price, inventory and certifications: 15 dBi WR-51 Standard Gain Horn Radome Cover PEWGCOV051-15

URL: https://www.pasternack.com/15-dbi-wr-51-standard-gain-horn-radome-cover-pewgcov051-15-p.aspx

The information contained in this document is accurate to the best of our knowledge and representative of the part described herein. It may be necessary to make modifications to the part and/or the documentation of the part, in order to implement improvements. Pasternack reserves the right to make such changes as required. Unless otherwise stated, all specifications are nominal. Pasternack does not make any representation or warranty regarding the suitability of the part described herein for any particular purpose, and Pasternack does not assume any liability arising out of the use of any part or documentation.

Pasternack Enterprises, Inc. • P.O. Box 16759, Irvine, CA 92623
Phone: (866) 727-8376 or (949) 261-1920 • **Fax:** (949) 261-7451
Sales@Pasternack.com • Techsupport@Pasternack.com

© 2020 Pasternack Enterprises All Rights Reserved

© 2020 Pasternack Enterprises All Rights Reserved

PEWGCOV051-15 REV 1

REVISION					
ZONE	REV	DESCRIPTION	DATE	CHANGED BY	APPROVED
	A	INITIAL RELEASE	10/20/2023	DMAY	KHIETPAS

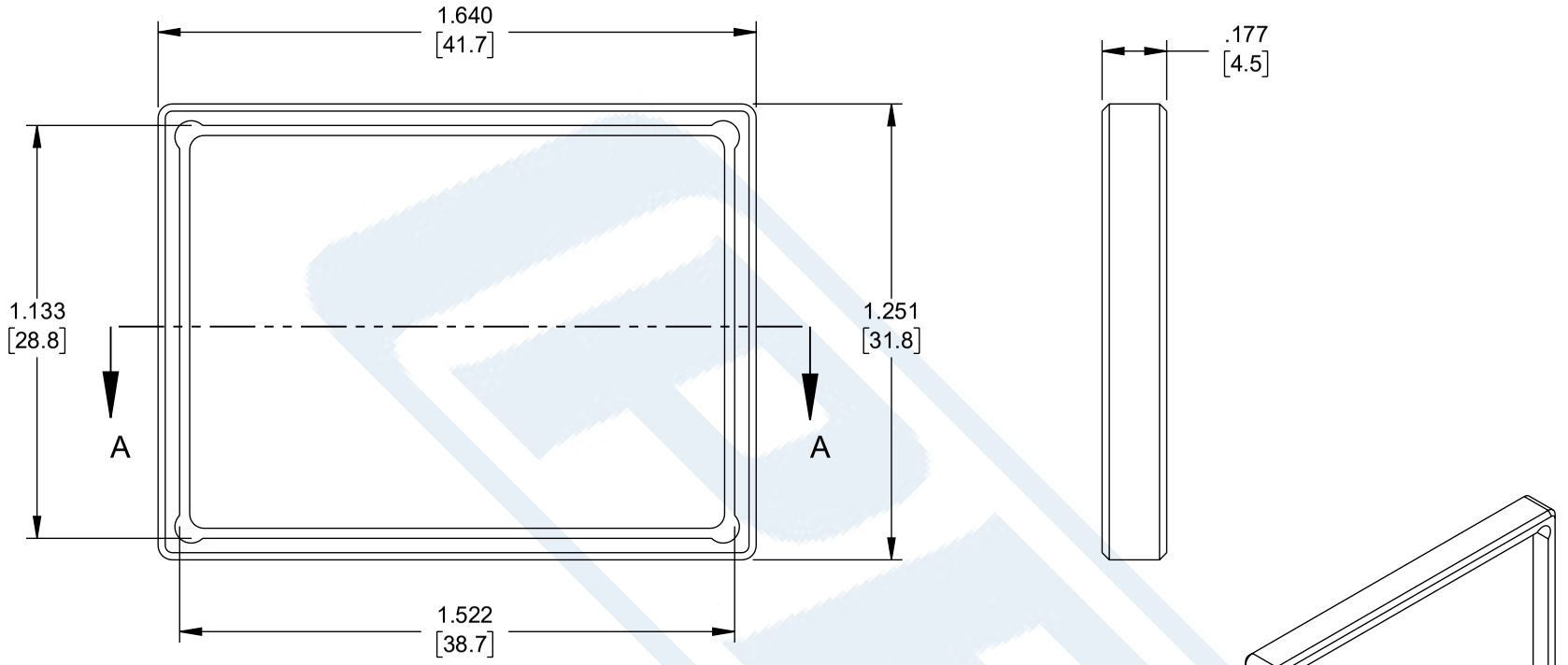

PEWGCOV051-15 CAD Drawing

15 dBi WR-51 Standard Gain Horn Radome Cover

UNLESS OTHERWISE SPECIFIED
LEADING DIMENSIONS ARE INCHES
DIMENSIONS IN [ ] ARE MILLIMETERS

TOLERANCES:

.X = ±.2 [5]	FRACTIONS
.XX = ±.02 [0.5]	± 1/32
.XXX = ±.005 [0.13]	ANGLES ± 1°

CABLE LENGTH TOLERANCES:
≤12 [305] = +1 [25] / -0
>12 [305] ≤ 60 [1524] = +2 [51] / -0
>60 [1524] ≤ 120 [3048] = +4 [102] / -0
>120 [3048] ≤ 300 [7620] = +6 [152] / -0
>300 [7620] = +5% / -0

ALL DIMENSIONS ARE FOR REFERENCE ONLY AND SUBJECT TO CHANGE WITHOUT NOTICE.
UN-DIMENSIONED/NON-CRITICAL FEATURES MAY VARY IN SIZE AND LOCATION
COLORS MAY VARY

PASTERNACK® an INFINITE brand

Website: www.Pasternack.com
Phone: 1.866.727.8376 | 1.949.261.1920

INTERPRET ALL DIMENSIONS AND TOLERANCES PER ASME Y14.5

SCALE	SHEET
NONE	1 OF 1

DESCRIPTION

RADOME COVER FOR WR51 WITH 15 dBi GAIN STANDARD GAIN HORN

SIZE	CAGE CODE	DRAWN BY	ITEM NO.	REV
A	53919	DMAY	PEWGCOV051-15	A

THE INFORMATION CONTAINED IN THIS DRAWING IS THE SOLE PROPERTY OF INFINITE ELECTRONICS, INC. ANY REPRODUCTION IN PART OR WHOLE WITHOUT THE WRITTEN PERMISSION OF INFINITE ELECTRONICS, INC. IS PROHIBITED. THESE COMMODITIES, TECHNOLOGY OR SOFTWARE WERE EXPORTED FROM THE UNITED STATES IN ACCORDANCE WITH THE EXPORT ADMINISTRATION REGULATIONS. DIVERSION CONTRARY TO U.S. LAW PROHIBITED.